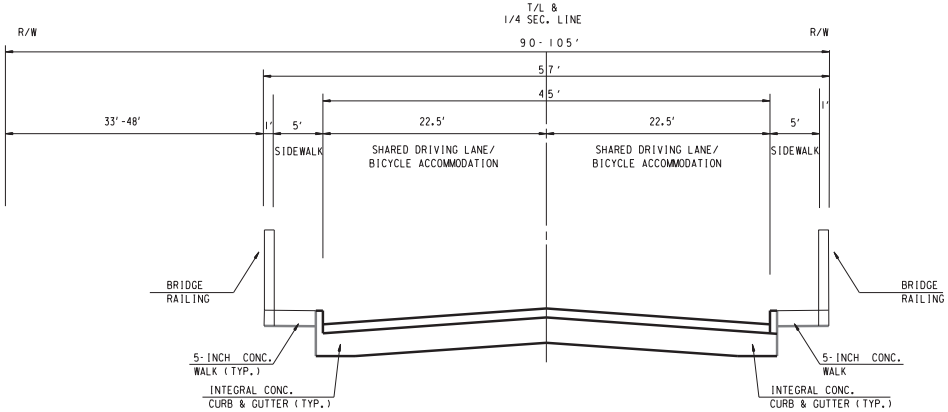

TYPICAL EXISTING SECTION
WEST VILLARD AVENUE BRIDGE - OVER LINCOLN CREEK PARKWAY
STA. 25+12 TO STA. 26+72

5

5

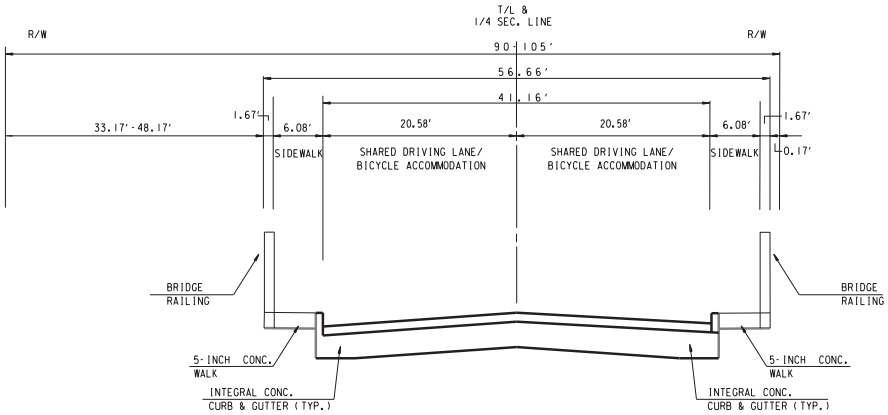

TYPICAL PROPOSED SECTION
WEST VILLARD AVENUE BRIDGE - OVER LINCOLN CREEK PARKWAY
STA. 25+12 TO STA. 26+72

STATE PROJECT NUMBER 2984-32-70	HWY: LOCAL	COUNTY: MILWAUKEE	TYPICAL SECTIONS	SCALE FEET	SHEET NO:	E

FILE NAME: W:\SPR\VILLARD BRIDGE\TYPICAL SECTION.DGN

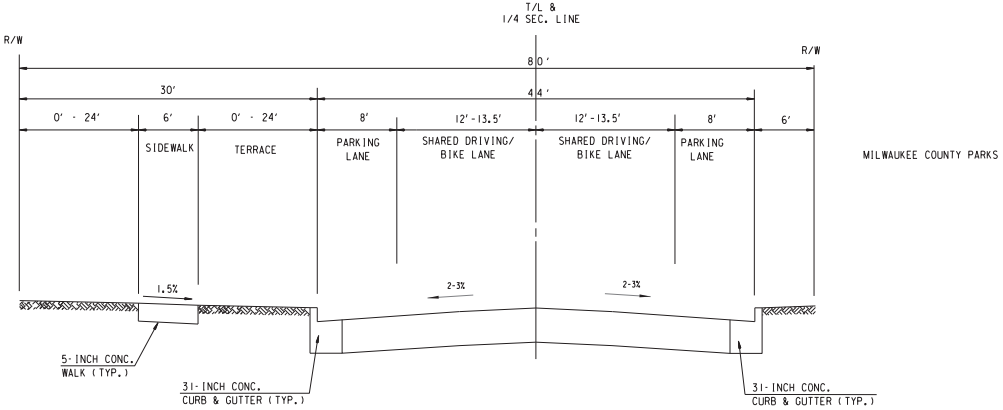

TYPICAL EXISTING SECTION

WEST VILLARD AVENUE - WEST APPROACH

STA. 24+25 TO STA. 25+12

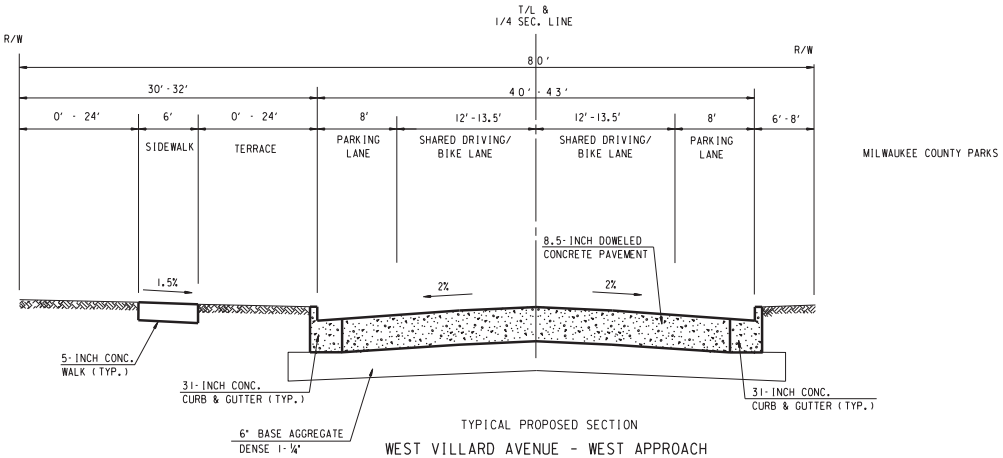

TYPICAL PROPOSED SECTION

WEST VILLARD AVENUE - WEST APPROACH

STA. 24+25 TO STA. 25+12

STATE PROJECT NUMBER 2984-32-70	HWY: LOCAL	COUNTY: MILWAUKEE	TYPICAL SECTIONS	SCALE FEET	SHEET NO:	E

FILE NAME: M:\SPB\VILLARD BRIDGE\TYPICAL SECTION.DGN

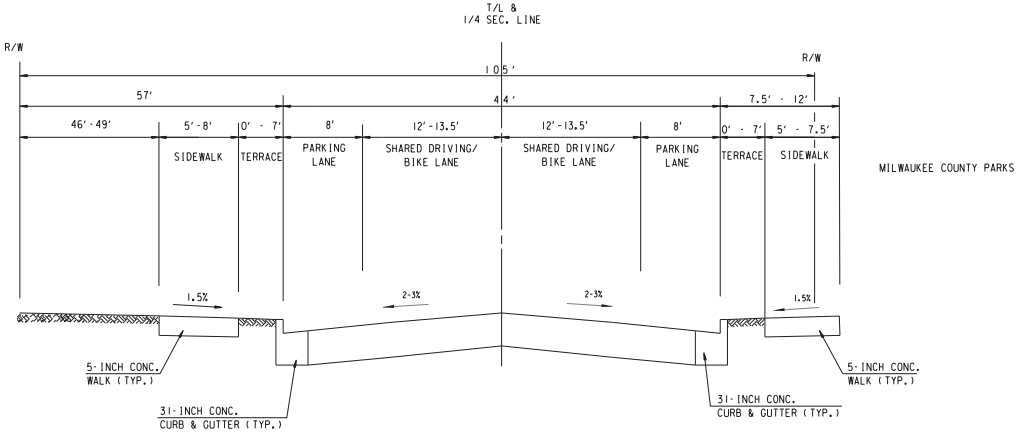

TYPICAL EXISTING SECTION

WEST VILLARD AVENUE - EAST APPROACH

STA. 26+72 TO STA. 27+46

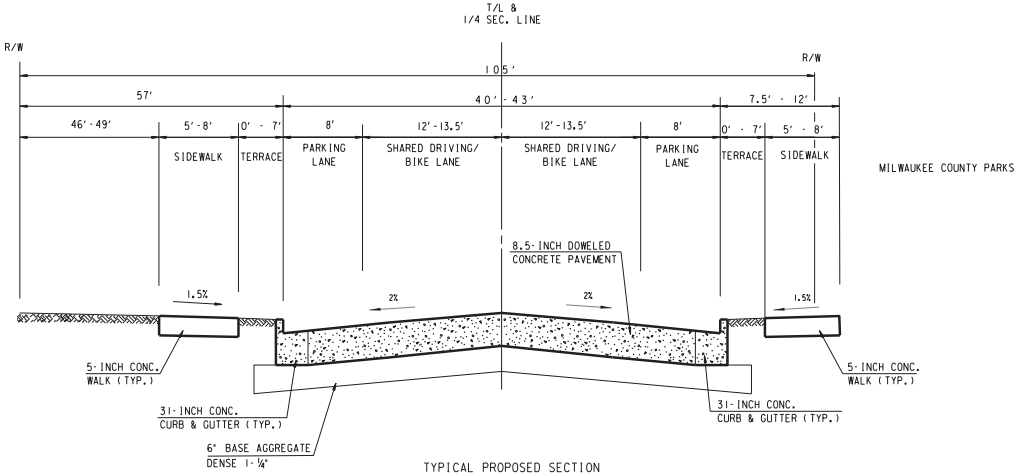

TYPICAL PROPOSED SECTION

WEST VILLARD AVENUE - EAST APPROACH

STA. 26+72 TO STA. 27+46

STATE PROJECT NUMBER 2984-32-70	HWY: LOCAL	COUNTY: MILWAUKEE	TYPICAL SECTIONS	SCALE FEET	SHEET NO:	E

FILE NAME: W:\SPR\VILLARD BRIDGE\TYPICAL SECTION.DGN

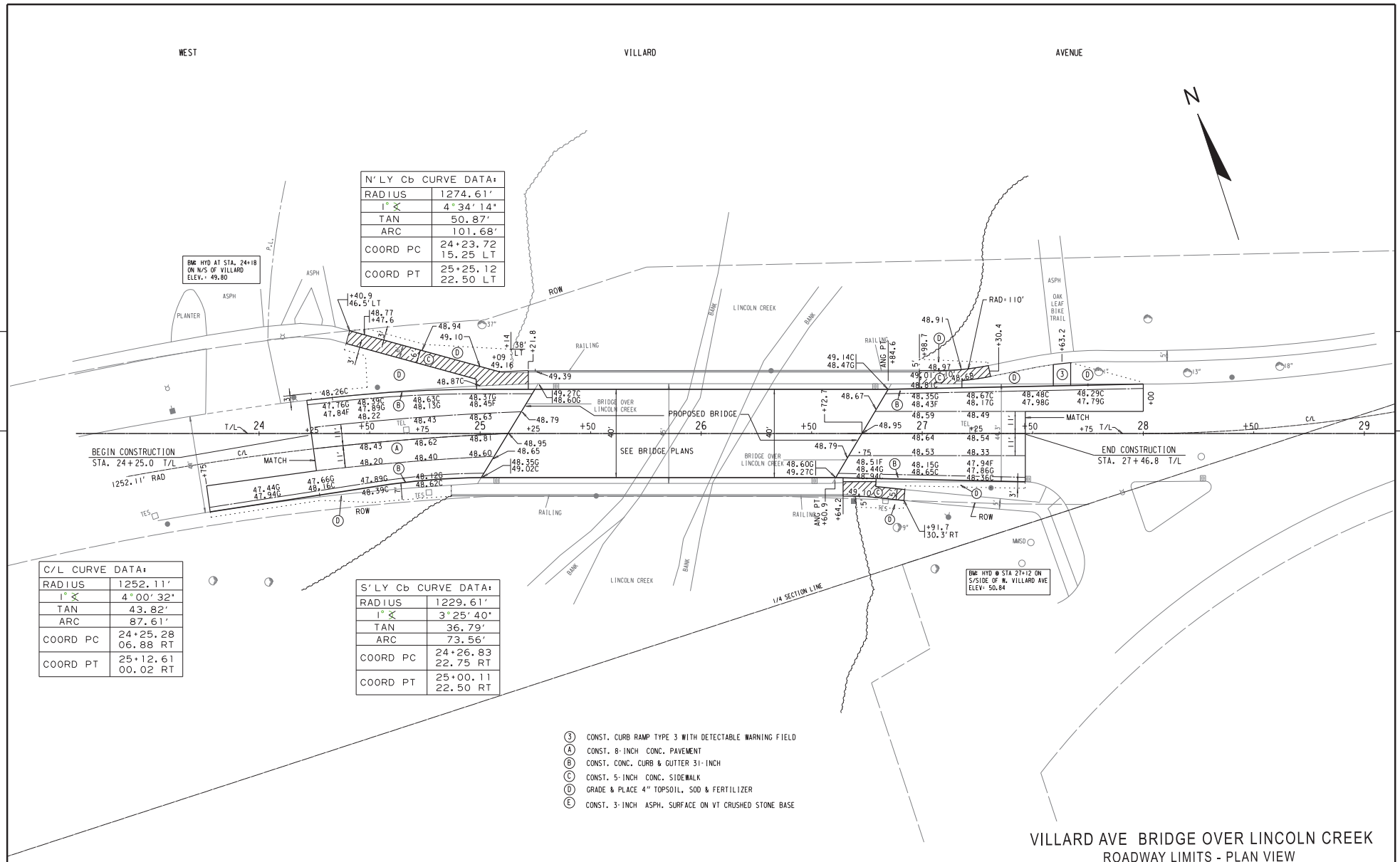

N'LY Cb CURVE DATA:	
RADIUS	1274.61'
I° ∢	4°34'14"
TAN	50.87'
ARC	101.68'
COORD PC	24+23.72 15.25 LT
COORD PT	25+25.12 22.50 LT

C/L CURVE DATA:	
RADIUS	1252.11'
I° ∢	4°00'32"
TAN	43.82'
ARC	87.61'
COORD PC	24+25.28 06.88 RT
COORD PT	25+12.61 00.02 RT

S'LY Cb CURVE DATA:	
RADIUS	1229.61'
I° ∢	3°25'40"
TAN	36.79'
ARC	73.56'
COORD PC	24+26.83 22.75 RT
COORD PT	25+00.11 22.50 RT

(3) CONST. CURB RAMP TYPE 3 WITH DETECTABLE WARNING FIELD
(A) CONST. 8-INCH CONC. PAVEMENT
(B) CONST. CONC. CURB & GUTTER 31-INCH
(C) CONST. 5-INCH CONC. SIDEWALK
(D) GRADE & PLACE 4" TOPSOIL, SOD & FERTILIZER
(E) CONST. 3-INCH ASPH. SURFACE ON VT CRUSHED STONE BASE

VILLARD AVE BRIDGE OVER LINCOLN CREEK

ROADWAY LIMITS - PLAN VIEW

STATE PROJECT NUMBER 2984-32-70 - -	HWY: LOCAL STREET	COUNTY: MILWAUKEE	PLAN	SCALE FEET 0' 40'	SHEET NO:	E

FILE NAME: W:\SPR\VILLARD BRIDGE\23-29.DGN

5

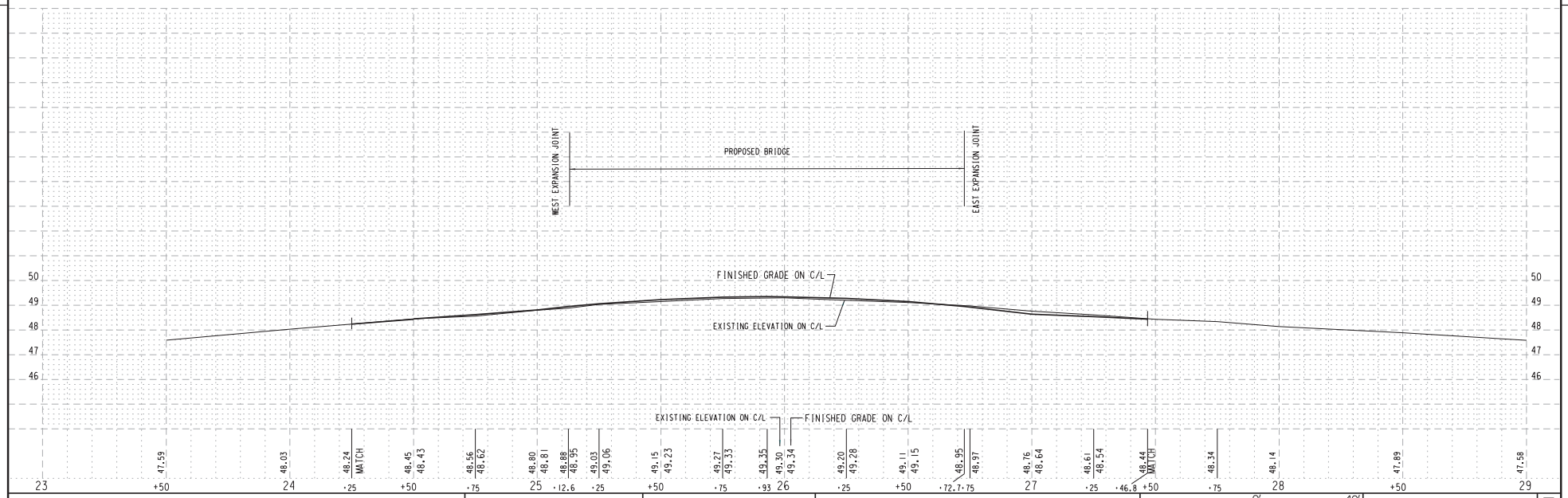

STATE PROJECT NUMBER 2984-32-70 - -	HWY: LOCAL STREET	COUNTY: MILWAUKEE	PROFILE	SCALE FEET 0' 40'	SHEET NO:	E

5

FILE NAME: W:\SPR\VILLARD BRIDGE\ 23-29.DGN

W:\STR\B050\1\PLANS\01_SITE PLAN AND ELEVATION.DGN

REVISED DATE: 12-11-2019 BY GJR

8

STATE PROJECT NUMBER

2984 - 32 - 71

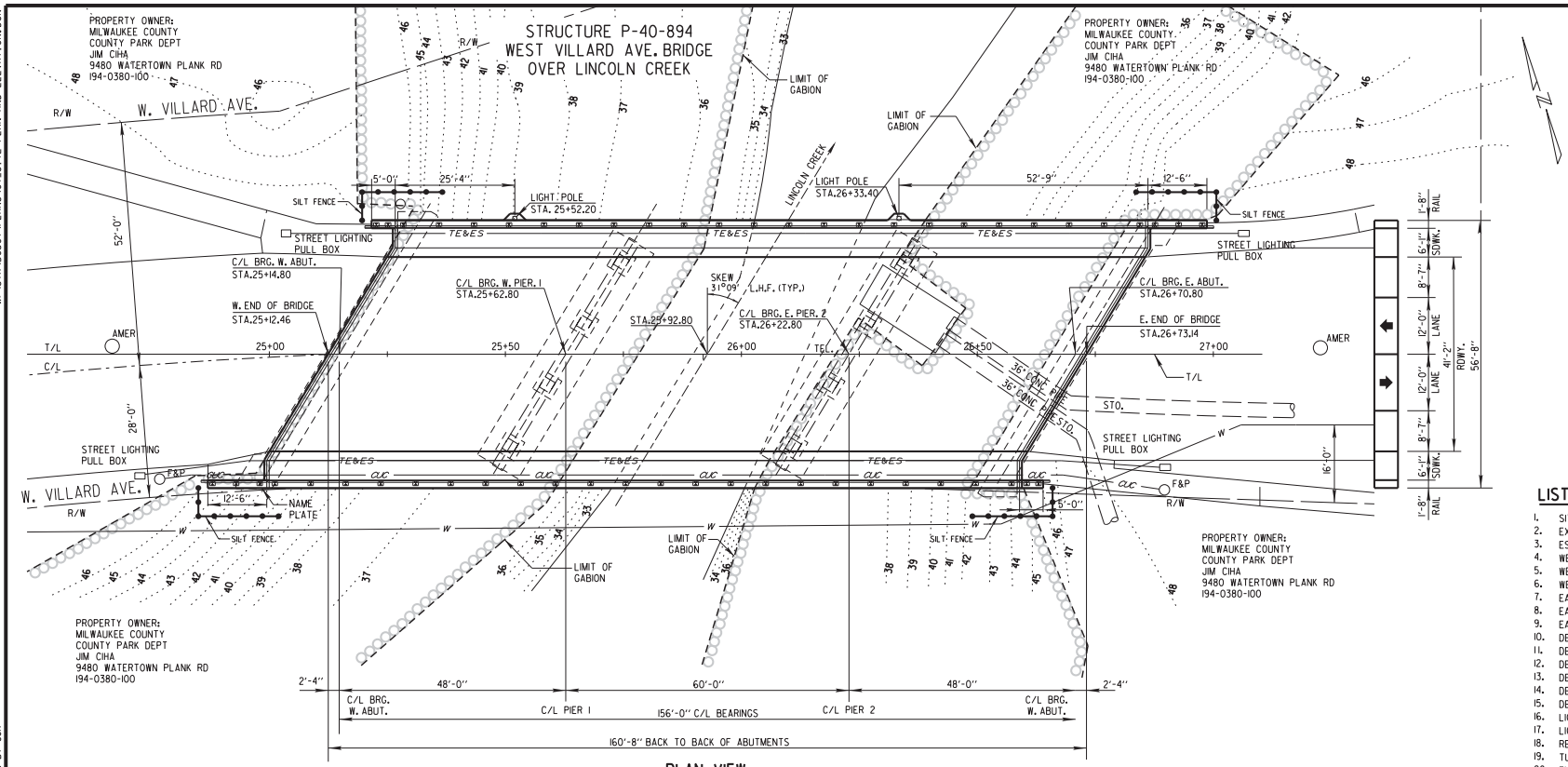

PLAN VIEW

THREE-SPAN STEEL GIRDER BRIDGE
DECK REPLACEMENT AND PAINTING

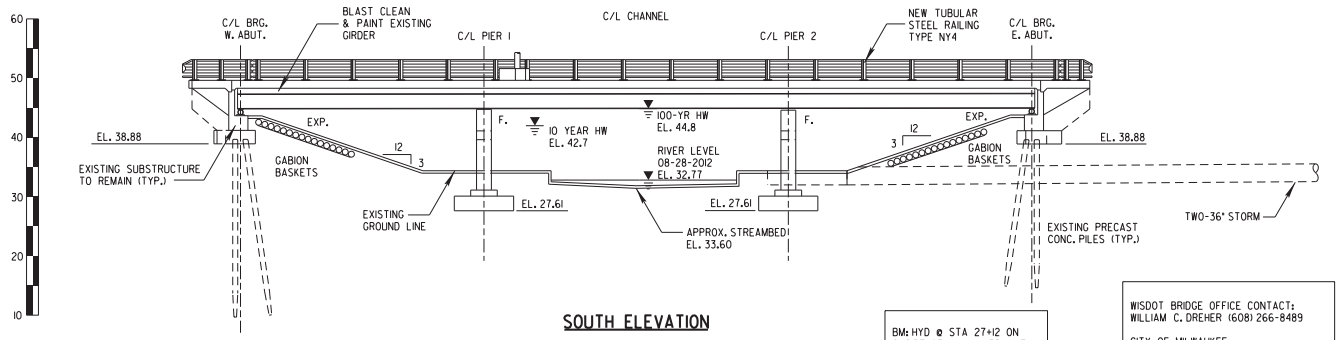

SOUTH ELEVATION

LOOKING NORTH
NORMAL TO SUBSTRUCTURE

BM: HYD @ STA 27+12 ON S/SIDE OF W. VILLARD AVE ELEV= 50.84

WISDOT BRIDGE OFFICE CONTACT:
WILLIAM C. DREHER (608) 266-8489

CITY OF MILWAUKEE
JONATHAN THOMAS (414) 286-0463

LIST OF DRAWINGS

1. SITE PLAN AND ELEVATION
2. EXISTING AND PROPOSED SECTIONS
3. ESTIMATE OF QUANTITIES
4. WEST ABUTMENT ELEVATION & PLAN VIEW
5. WEST ABUTMENT SECTION DETAILS & BILL OF BARS
6. WEST ABUTMENT WING WALL DETAILS
7. EAST ABUTMENT ELEVATION & PLAN VIEW
8. EAST ABUTMENT SECTION DETAILS & BILL OF BARS
9. EAST ABUTMENT WING WALL DETAILS
10. DECK PLAN WEST SPAN
11. DECK PLAN MIDDLE SPAN
12. DECK PLAN EAST SPAN
13. DECK CROSS SECTION
14. DECK BILL OF BARS & SHEAR CONNECTOR LAYOUT
15. DECK GRADES
16. LIGHTPOLE SIDEWALK REINFORCEMENT DETAILS
17. LIGHT POLE BASE BILL OF BARS
18. REALING PLAN
19. TUBULAR STELL RAILING TYPE NY4
20. END POST DETAILS FOR TUBULAR STEEL RAILING TYPE NY4
21. STRIP SEAL EXPANSION JOINT SECTIONS
22. STRIP SEAL EXPANSION JOINT DETAILS
23. ELASTOMERIC BEARINGS REPLACEMENT DETAILS
24. PIER 1 & 2 CONCRETE SURFACE REPAIRS
25. MODIFIED GIRDER AND DIAPHRAGMS

NO.	DATE	REVISION	BY

ORIGINAL PLANS PREPARED BY
CITY OF MILWAUKEE
DEPARTMENT OF PUBLIC WORKS
INFRASTRUCTURE SERVICES DIVISION

STATE OF WISCONSIN
DEPARTMENT OF TRANSPORTATION

ACCEPTED _____ _____
CHIEF STRUCTURES DESIGN ENGINEER DATE

STRUCTURE P-40-894

W. VILLARD AVE. OVER LINCOLN CREEK

COUNTY MILWAUKEE | ~~TOWN~~/CITY/~~VILLAGE~~ MILWAUKEE

DESIGN SPEC. REHABILITATION N/A

DESIGNED BY	DESIGN CK'D.	DRAWN BY	PLANS CK'D.
SSR	AR	GJR	AR

SITE PLAN AND ELEVATION

SHEET 1 OF 25

8

W:\STR\B050\PLANS\02_EXISTING AND PROPOSED SECTIONS.DGN

REVISED 12-10-2019 BY GJR

STATE PROJECT NUMBER
2984 - 32 - 71

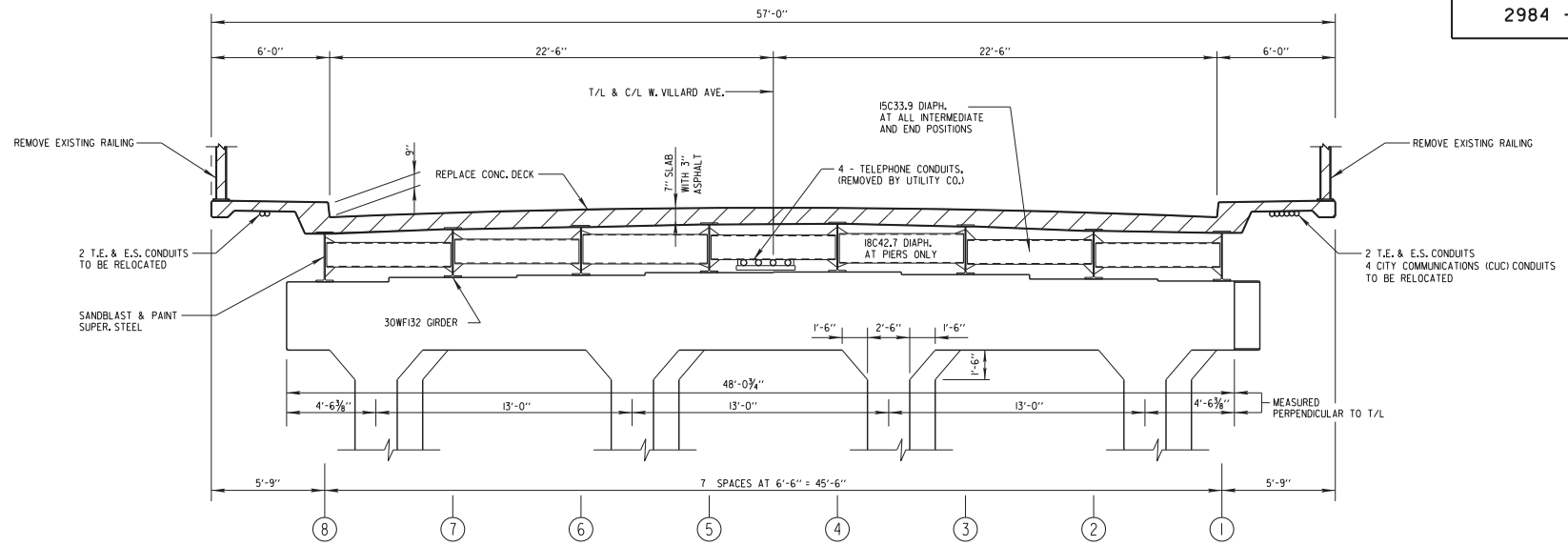

EXISTING SECTION THRU BRIDGE LOOKING EAST

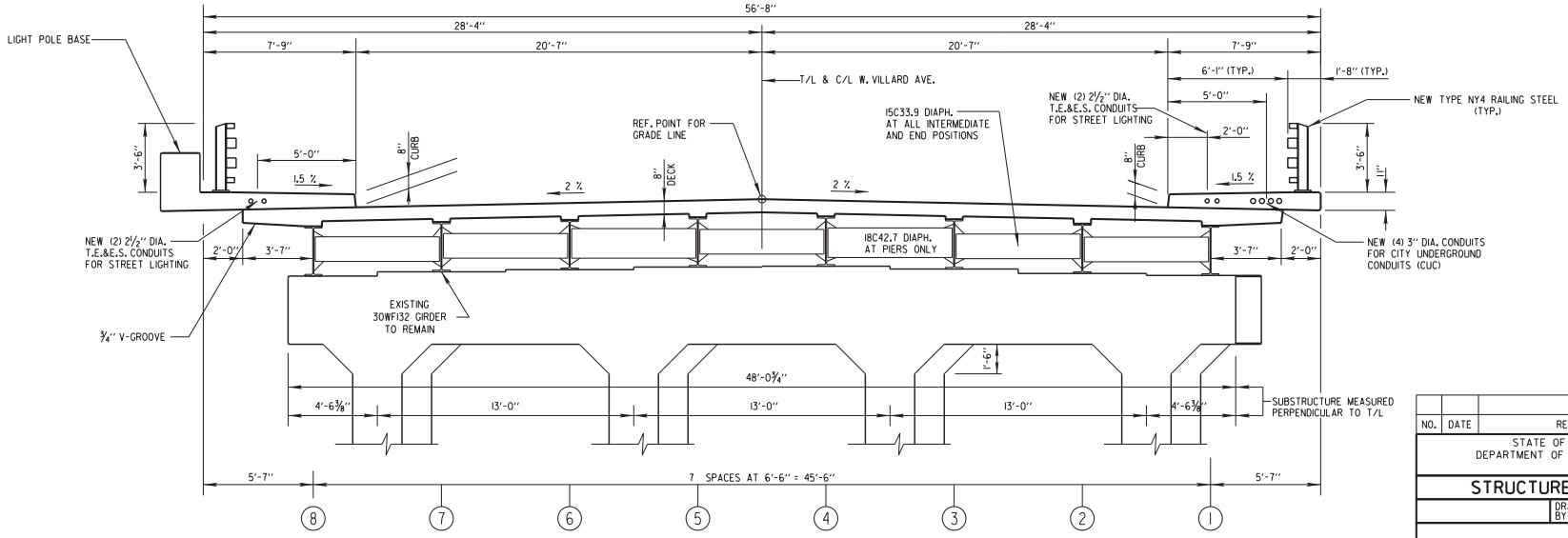

PROPOSED SECTION THRU BRIDGE LOOKING EAST

NO.	DATE	REVISION	BY

STATE OF WISCONSIN
DEPARTMENT OF TRANSPORTATION

STRUCTURE P-40-894

DRAWN BY	GJR	PLANS CK'D.	SSR AR

EXISTING AND PROPOSED SECTIONS

SHEET 2 OF 25

8

8