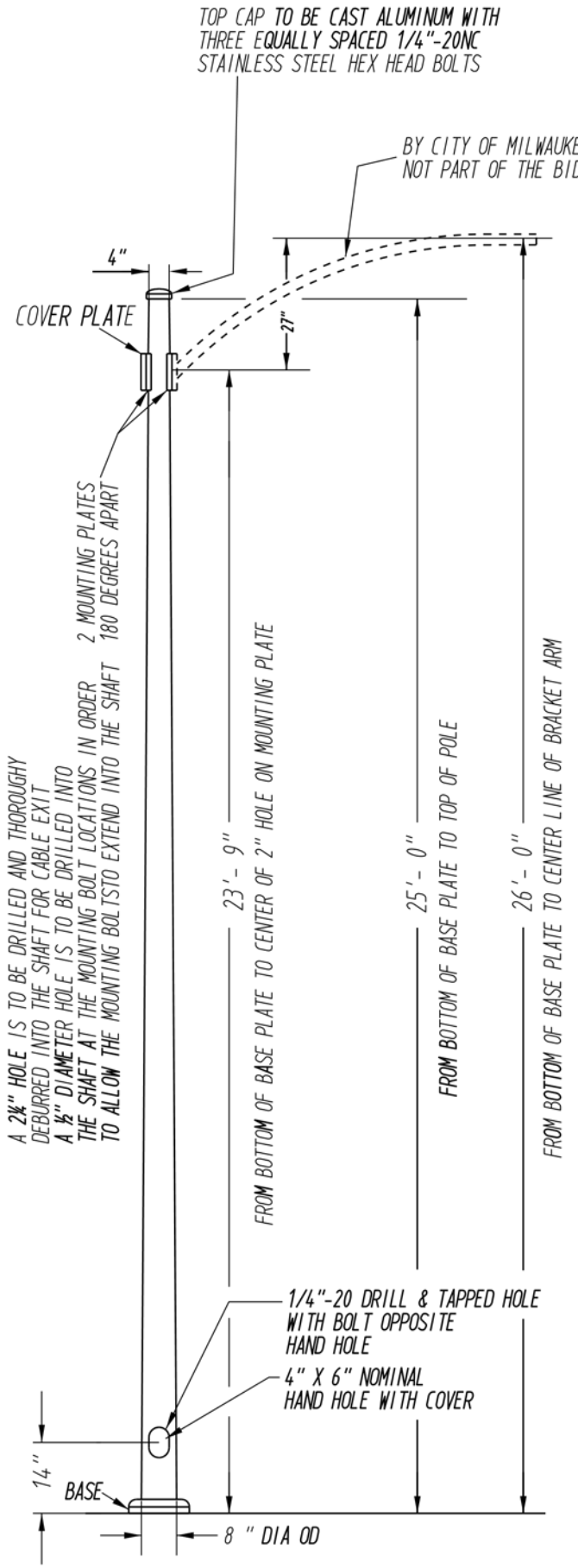

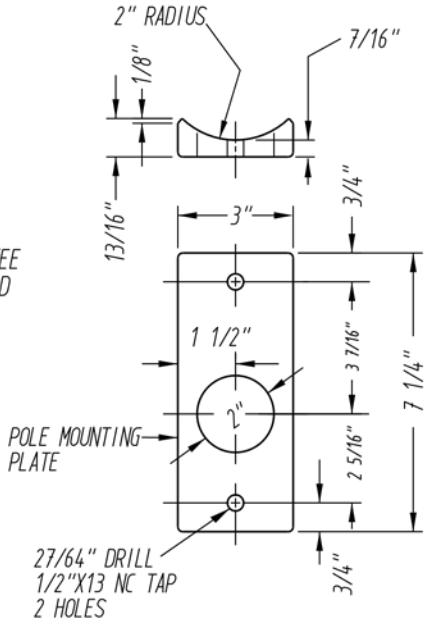

CAST ALUMINUM
ASTM #713 OR
ASTM #356-T6

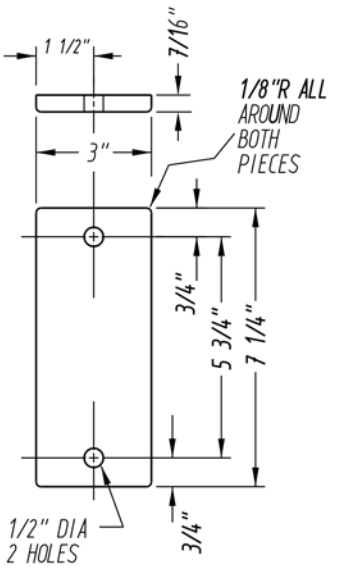

COVER PLATE
7/16" ALUMINUM SHEET STOCK
ATTACHED WITH 1/2" x 13NC X1/2" LONG
STAINLESS STEEL HEX HEAD BOLTS
1 PER POLE

BASE PLATE CASTING

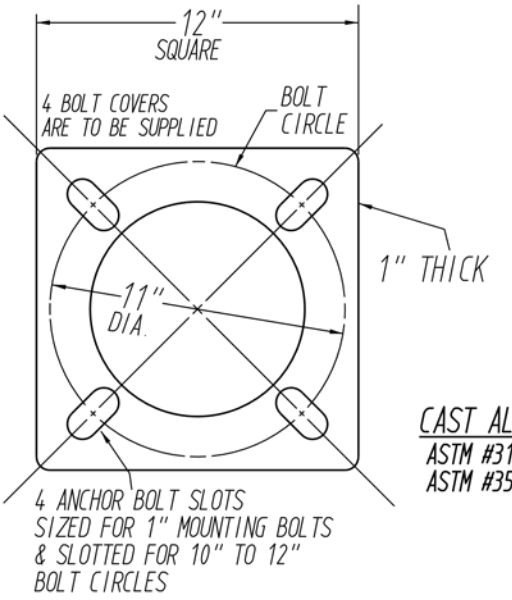

CAST ALUMINUM
ASTM #319 OR
ASTM #356-T6

REVISED DATE	REVISED BY
SPEC. NO 12c-C-1	

BOLT DOWN ALUMINUM POLE

26 FOOT MOUNTING HEIGHT

CITY OF MILWAUKEE D P W
TRANSPORTATION SECTION
INFRASTRUCTURE SERVICES DIVISION

STREET LIGHTING DIVISION

DATE	SCALE	DRAWN	DESIGN	CHECKED	APPROVED
11-14-14	NONE	DK	BES		

SUPERSEDES

SUPERSEDED BY

DRG # B-14-13

G:\Street Lighting Specs\Poles, Aluminum Bolt Down\B-14-13 26FT.dgn