PROPOSED RETAIL DEVELOPMENT FOR:
SOUTHGATE MARKETPLACE OUTLOT, LLC
MILWAUKEE, WISCONSIN

LEGEND

- 000.00 — PROPOSED SPOT ELEVATIONS (FLOW LINE OF CURB UNLESS OTHERWISE SPECIFIED)
- 000.00 TR / 000.00 BR — PROPOSED SPOT ELEVATIONS (TOP OF RETAINING WALL, TOP OF SURFACE GRADE AT BOTTOM OF WALL)
- 000.00 TC / 000.00 BC — PROPOSED SPOT ELEVATIONS (TOP OF CURB, BOTTOM OF CURB)
- 000.00 TW / 000.00 BW — PROPOSED SPOT ELEVATIONS (TOP OF WALK, BOTTOM OF WALK)
- EXISTING WATER VALVE IN BOX
- PROPOSED WATER VALVE IN BOX
- EXISTING WATER VALVE IN MANHOLE
- EXISTING WATER SERVICE VALVE
- EXISTING TELEPHONE MANHOLE
- EXISTING ROUND CATCH BASIN
- PROPOSED ROUND CATCH BASIN
- EXISTING SQUARE CATCH BASIN
- EXISTING CURB INLET
- PROPOSED CURB INLET
- EXISTING UTILITY POLE
- EXISTING UTILITY POLE WITH GUY WIRE
- EXISTING STREET LIGHT
- EXISTING TELEPHONE PEDESTAL
- EXISTING ELECTRIC PEDESTAL
- EXISTING ELECTRIC BOX
- EXISTING CABLE TV PEDESTAL
- PROPOSED DRAINAGE FLOW
- 1-1/4" REBAR SET WEIGHING 4.30 LB/FT.
- 3/4" REBAR SET WEIGHING 1.50 LB/FT.
- 1-1/4" REBAR FOUND
- 3/4" REBAR FOUND
- 2" IRON PIPE FOUND
- 1" IRON PIPE FOUND
- EXISTING FLOOD LIGHT
- SECTION CORNER
- PROPOSED APRON ENDWALL
- EXISTING MARSH AREA
- EXISTING DECIDUOUS TREE WITH TRUNK DIAMETER
- EXISTING CONIFEROUS TREE
- EXISTING SHRUB
- EXISTING STUMP
- SOIL BORING
- EXISTING WELL
- PROPOSED WELL
- EXISTING LIGHT POLE
- EXISTING SIGN
- CENTER LINE
- EXISTING HANDICAP PARKING STALL
- PROPOSED HANDICAP PARKING STALL
- EXISTING GAS VALVE
- EXISTING WOODED AREA
- EXISTING HEDGE
- EXISTING CHAINLINK FENCE
- EXISTING WOOD FENCE
- EXISTING BARBED WIRE FENCE
- PROPERTY LINE
- EXISTING GUARD RAIL
- EXISTING STORM SEWER AND MANHOLE
- PROPOSED STORM SEWER AND MANHOLE
- EXISTING SANITARY SEWER AND MANHOLE
- PROPOSED SANITARY SEWER AND MANHOLE
- EXISTING WATER LINE AND HYDRANT
- PROPOSED WATER LINE AND HYDRANT
- EXISTING OVERHEAD UTILITY LINE
- EXISTING UNDERGROUND FIBER OPTIC LINE
- EXISTING UNDERGROUND ELECTRIC CABLE
- EXISTING UNDERGROUND TELEPHONE CABLE
- EXISTING UNDERGROUND GAS LINE
- PROPOSED CURB AND GUTTER
- EXISTING CURB AND GUTTER
- GRADING/SEEDING LIMITS
- RIGHT-OF-WAY LINE
- PROPERTY LINE
- RAILROAD TRACKS
- EXISTING GROUND CONTOUR
- PROPOSED GROUND CONTOUR

CIVIL SHEET INDEX

SHEET	SHEET TITLE
C1.0	CIVIL COVER AND SPECIFICATION SHEET
C1.1	EXISTING SITE AND DEMOLITION PLAN
C1.2	SITE PLAN
C1.3	GRADING AND EROSION CONTROL PLAN
C1.4	UTILITIES PLAN
C1.5	EROSION CONTROL/STORMWATER MANAGEMENT NOTES AND DETAILS
C1.6	LANDSCAPE PLAN

TO OBTAIN LOCATION OF PARTICIPANTS' UNDERGROUND FACILITIES BEFORE YOU DIG IN WISCONSIN

CALL DIGGERS HOTLINE
1-800-242-8511

TOLL FREE
TELEFAX (414) 259-0947
TDD (FOR THE HEARING IMPAIRED) 1-800 542-2289

WISCONSIN STATUTE 182.0175 (1974) REQUIRES MINIMUM OF 3 WORK DAYS NOTICE BEFORE YOU EXCAVATE

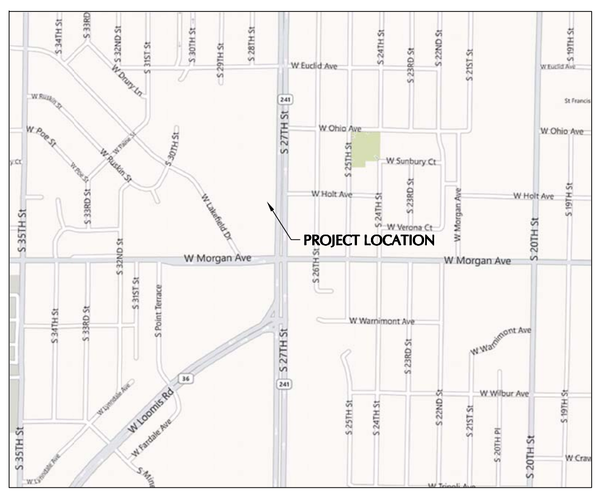

PROJECT LOCATION MAP

PLAN SPECIFICATIONS (BASED ON CSI FORMAT)

DIVISION 31 EARTH WORK

31 10 00 SITE CLEARING (DEMOLITION)
A. DIGGER'S HOT LINE SHALL BE CONTACTED AND ALL UTILITIES SHALL BE LOCATED BEFORE STARTING SITE DEMOLITION. CONTRACTOR SHALL ALSO BE RESPONSIBLE FOR PRIVATE UTILITY LOCATES. DESIGN ENGINEER SHALL BE NOTIFIED OF ANY DISCREPANCIES BETWEEN PLAN AND FIELD CONDITIONS PRIOR TO CONSTRUCTION.

B. DEMOLITION PLAN IS AN OVERVIEW OF DEMOLITION TO TAKE PLACE ON SITE. CONTRACTOR TO FIELD VERIFY EXISTING SITE CONDITIONS PRIOR TO BIDDING. CONTRACTOR SHALL REMOVE, REPLACE OR DEMOLISH ALL ITEMS AS NEEDED DURING CONSTRUCTION.

C. CONTRACTOR TO PROTECT EXISTING IMPROVEMENTS THAT ARE SCHEDULED TO REMAIN. ANY DAMAGE TO EXISTING FACILITIES SHALL BE REPLACED AT CONTRACTORS EXPENSE.

D. ALL CONCRETE NOTED TO BE REMOVED SHALL BE REMOVED TO NEAREST CONTROL JOINT AND REPLACED. SAWCUTTING OF CONCRETE IS NOT ACCEPTABLE.

31 20 00 EARTH MOVING
A. DIGGER'S HOT LINE SHALL BE CONTACTED AND ALL UTILITIES SHALL BE LOCATED BEFORE STARTING EXCAVATION. CONTRACTOR SHALL ALSO BE RESPONSIBLE FOR PRIVATE UTILITY LOCATES. DESIGN ENGINEER SHALL BE NOTIFIED OF ANY DISCREPANCIES BETWEEN PLAN AND FIELD CONDITIONS PRIOR TO CONSTRUCTION.

B. PROVIDE ALL LABOR, MATERIALS AND EQUIPMENT FOR ALL EXCAVATION, GRADING, FILL AND BACKFILL WORK AS REQUIRED TO COMPLETE THE GENERAL CONSTRUCTION WORK. ALL EXCAVATION AND BACKFILL FOR ELECTRICALS AND MECHANICALS ARE THE RESPONSIBILITY OF THE RESPECTIVE CONTRACTOR.

C. ALL ORGANIC TOPSOIL INSIDE THE BUILDING AREA, UNDER PAVED AREAS, AND AT SITE FILL AREAS SHALL BE REMOVED. PROOF ROLL SUBGRADES BEFORE PLACING FILL WITH HEAVY PNEUMATIC-TIRED EQUIPMENT, SUCH AS A FULLY-LOADED TANDEM AXLE DUMP TRUCK, TO IDENTIFY SOFT POCKETS AND AREAS OF EXCESS YIELDING. CONTRACTOR SHALL VERIFY TOPSOIL DEPTHS PRIOR TO CONSTRUCTION. THE CONTRACTOR SHALL REVIEW AND FOLLOW THE RECOMMENDATIONS OF THE GEOTECHNICAL REPORT AND ACCOUNT FOR EXISTING CONDITIONS PRIOR TO SUBMITTING BID FOR THE PROJECT. EXCESS MATERIALS SHALL BE REMOVED FROM THE SITE UNLESS OTHERWISE DIRECTED IN THE PLANS OR BY LOCAL ZONING REQUIREMENTS.

D. PLACE AND COMPACT FILL MATERIAL IN LAYERS TO REQUIRED ELEVATIONS. UNIFORMLY MOISTEN OR AERATE SUBGRADE AND EACH SUBSEQUENT FILL OR BACKFILL LAYER BEFORE COMPACTION AS RECOMMENDED TO ACHIEVE SPECIFIED DRY DENSITY. REMOVE AND REPLACE, OR SCARIFY AND AIR DRY, OTHERWISE SATISFACTORY SOIL MATERIAL THAT IS TOO WET TO COMPACT TO SPECIFIED DRY DENSITY.

E. PLACE BACKFILL AND FILL MATERIALS IN LAYERS NOT MORE THAN 8" IN LOOSE DEPTH FOR MATERIAL COMPACTED BY HEAVY COMPACTION EQUIPMENT, AND NOT MORE THAN 4" IN LOOSE DEPTH FOR MATERIAL COMPACTED BY HAND-OPERATED TAMPERS.

F. COMPACT THE SOIL TO NOT LESS THAN THE FOLLOWING PERCENTAGES OF MAXIMUM DRY DENSITY ACCORDING TO ASTM D 698, STANDARD PROCTOR TEST. FILL MAY NOT BE PLACED ON FROZEN GROUND AND NO FROZEN MATERIALS MAY BE USED FOR BACK FILL. APPLY THE MORE STRINGENT REQUIREMENTS WHEN COMPARING BETWEEN THE FOLLOWING AND THE GEOTECHNICAL REPORT.
1. UNDER FOUNDATIONS - SUBGRADE, AND EACH LAYER OF BACKFILL OR FILL MATERIAL, TO NOT LESS THAN 98 PERCENT.
2. UNDER INTERIOR SLAB-ON-GRADE WHERE GROUNDWATER IS MORE THAN 3 FEET BELOW THE SLAB - PLACE A DRAINAGE COURSE LAYER OF 3/4" CRUSHED STONE, WITH 5% TO 12% FINES, PER THICKNESS INDICATED ON FOUNDATION PLANS ON PREPARED SUBGRADE. COMPACT THE SUBGRADE AND DRAINAGE COURSE TO NOT LESS THAN 95 PERCENT.
3. UNDER INTERIOR SLAB-ON-GRADE WHERE GROUNDWATER IS WITHIN 3 FEET OF THE SLAB SURFACE- PLACE A DRAINAGE COURSE LAYER OF CLEAN 3/4" CRUSHED STONE, WITH NO MORE THAN 5% FINES, PER THICKNESS INDICATED ON FOUNDATION PLANS ON PREPARED SUBGRADE. COMPACT THE SUBGRADE AND DRAINAGE COURSE TO NOT LESS THAN 95 PERCENT.
4. UNDER EXTERIOR CONCRETE AND ASPHALT PAVEMENTS - COMPACT THE SUBGRADE AND EACH LAYER OF BACKFILL OR FILL MATERIAL TO NOT LESS THAN 95 PERCENT.
5. UNDER WALKWAYS - COMPACT SUBGRADE AND EACH LAYER OF BACKFILL OR FILL MATERIAL TO NOT LESS THAN 95 PERCENT.
6. UNDER LAWN OR UNPAVED AREAS - COMPACT SUBGRADE AND EACH LAYER OF BACKFILL OR FILL MATERIAL, TO NOT LESS THAN 85 PERCENT.

G. CONTRACTOR SHALL ENGAGE A QUALIFIED INDEPENDENT TESTING AND INSPECTING AGENCY TO PERFORM FIELD TESTS AND INSPECTIONS.

H. ALLOW THE TESTING AGENCY TO TEST AND INSPECT SUBGRADES AND EACH FILL OR BACKFILL LAYER. PROCEED WITH SUBSEQUENT EARTHWORK ONLY AFTER TEST RESULTS FOR PREVIOUSLY COMPLETED WORK COMPLY WITH REQUIREMENTS. PROVIDE ONE TEST FOR EVERY 2000 SQUARE FEET OF PAVED AREA OR BUILDING SLAB, ONE TEST FOR EACH SPREAD FOOTING, AND ONE TEST FOR EVERY 50 LINEAR FEET OF WALL STRIP FOOTING.

I. WHEN TESTING AGENCY REPORTS THAT SUBGRADES, FILLS, OR BACKFILLS HAVE NOT ACHIEVED DEGREE OF COMPACTION SPECIFIED, SCARIFY AND MOISTEN OR AERATE, OR REMOVE AND REPLACE SOIL TO DEPTH REQUIRED; RECOMPACT AND RETEST UNTIL SPECIFIED COMPACTION IS OBTAINED.

J. THE BUILDING SITE SHALL BE GRADED TO PROVIDE DRAINAGE AWAY FROM THE BUILDING AS INDICATED ON THE PLANS.

31 30 00 EROSION CONTROL
A. THE GRADING OF THE REFLECTS 23,375 S.F. (0.54 ACRES) OF DISTURBED AREA. THE SITE IS THEREFORE EXEMPT FROM WISCONSIN DEPARTMENT OF NATURAL RESOURCES NR151 NOTICE OF INTENT REQUIREMENTS.

B. THE CONTRACTOR SHALL SEE THE EROSION CONTROL PLANS FOR DETAILS AND SPECIFICATIONS.

DIVISION 32 EXTERIOR IMPROVEMENTS

32 10 00 AGGREGATE BASE & ASPHALT PAVEMENT
A. CONTRACTOR TO PROVIDE COMPACTED AGGREGATE BASE TYPE AND DEPTH AS INDICATED ON THE PLANS. ALL AGGREGATE PROVIDED MUST COMPLY WITH SECTION 305 OF THE WISCONSIN STANDARD SPECIFICATIONS FOR HIGHWAY AND STRUCTURE CONSTRUCTION.

B. CONTRACTOR TO PROVIDE HOT MIX ASPHALT PAVEMENT DEPTHS AS INDICATED ON THE PLANS. PROVIDE THE FOLLOWING HOT MIX ASPHALT MIXTURE TYPES PER SECTION 460 OF THE WISCONSIN STANDARD SPECIFICATIONS FOR HIGHWAY AND STRUCTURE CONSTRUCTION
1. STANDARD ASPHALT PAVING
   - SURFACE COURSE: E-0.3
   - BINDER COURSE: E-0.3

C. CONTRACTOR TO COMPACT THE AGGREGATE BASE, ASPHALT BINDER COURSE, AND ASPHALT SURFACE COURSE TO AN AVERAGE DENSITY PER WISCONSIN STANDARD SPECIFICATIONS FOR HIGHWAY AND STRUCTURE CONSTRUCTION.

D. HOT MIX ASPHALT CONSTRUCTION TO BE PROVIDED PER MORE STRINGENT REQUIREMENTS OF GEOTECHNICAL REPORT OR CONSTRUCTION DOCUMENTS.

32 20 00 CONCRETE AND AGGREGATE BASE
A. CONTRACTOR TO PROVIDE COMPACTED AGGREGATE BASE TYPE AND DEPTH AS INDICATED ON THE PLANS. ALL AGGREGATE PROVIDED MUST COMPLY WITH SECTION 305 OF THE WISCONSIN STANDARD SPECIFICATIONS FOR HIGHWAY AND STRUCTURE CONSTRUCTION.

B. DESIGN AND CONSTRUCTION OF ALL CAST-IN-PLACE CONCRETE WORK SHALL CONFORM TO ACI 318 BUILDING CODE AND CRSI MANUAL OF STANDARD PRACTICE.

C. CONCRETE SLAB CONSTRUCTION TO BE PROVIDED PER MORE STRINGENT REQUIREMENTS OF GEOTECHNICAL REPORT OR CONSTRUCTION DOCUMENTS.

D. DESIGN MIXES SHALL BE IN ACCORDANCE WITH ASTM C94
1. STRENGTH TO BE MINIMUM OF 4,000 PSI AT 28 DAYS FOR EXTERIOR CONCRETE.
2. SLUMP SHALL NOT EXCEED 4" FOR EXTERIOR CONCRETE SLABS
3. SLUMP SHALL BE 2.5" OR LESS FOR SLIP-FORMED CURB AND GUTTER
4. SLUMP SHALL BE BETWEEN 1.5" TO 3" FOR NON SLIP-FORMED CURB AND GUTTER.
5. ALL EXTERIOR CONCRETE SHALL BE AIR ENTRAINED WITH 4% TO 7% AIR CONTENT. NO OTHER ADMIXUTRES SHALL BE USED WITHOUT APPROVAL OF EXCEL ENGINEERING, INC. CALCIUM CHLORIDE SHALL NOT BE USED.
6. MAXIMUM AGGREGATE SIZE FOR ALL EXTERIOR CONCRETE SHALL BE 0.75 INCHES.

E. ALL EXTERIOR MECHANICAL EQUIPMENT CONCRETE PADS SHALL BE SIZED AND DESIGNED BY THE EQUIPMENT SUPPLIER.

F. CONCRETE SLABS SHALL HAVE CONSTRUCTION JOINTS OR SAW CUT JOINTS PLACED AS INDICATED ON THE PLANS. SAWCUTS TO BE DONE AS SOON AS POSSIBLE, BUT NO LATER THAN 24 HOURS AFTER CONCRETE IS PLACED. CONCRETE CURB AND GUTTER JOINTING SHALL BE PLACED EVERY 10' OR CLOSER (8' MIN.). ALL EXTERIOR CONCRETE SLABS SHALL HAVE A LIGHT BROOM FINISH UNLESS NOTED OTHERWISE. ALL CONCRETE IS TO BE CURED FOR 7 DAYS. EXTERIOR CONCRETE SHALL BE SEPARATED FROM BUILDINGS WITH CONTINUOUS 0.5 INCH FIBER EXPANSION JOINT AND/OR 0.25 INCH FIBER EXPANSION JOINT AT DECORATIVE MASONRY UNITS.

G. ALL REINFORCING BARS SHALL BE ASTM A615 GRADE 60. THICKNESS OF CONCRETE COVER OVER REINFORCEMENT SHALL BE NOT LESS THAN 3" WHERE CONCRETE IS DEPOSITED AGAINST THE GROUND WITHOUT THE USE OF FORMS AND NOT LESS THAN 1.5" IN ALL OTHER LOCATIONS. ALL REINFORCING SHALL BE LAPPED 36 DIAMETERS FOR UP TO #6 BARS, 60 DIAMETERS FOR #7 TO #10 BARS OR AS NOTED ON THE DRAWINGS AND EXTENDED AROUND CORNERS WITH CORNER BARS. PLACING AND DETAILING OF STEEL REINFORCING AND REINFORCING SUPPORTS SHALL BE IN ACCORDANCE WITH CRSI AND ACI MANUAL AND STANDARD PRACTICES. THE REINFORCEMENT SHALL NOT BE PAINTED AND MUST BE FREE OF GREASE/OIL, DIRT OR DEEP RUST WHEN PLACED IN THE WORK. ALL WELDED WIRE FABRIC SHALL MEET THE REQUIREMENTS OF ASTM A 185. WELDED WIRE FABRIC SHALL BE PLACED 2" FROM TOP OF SLAB, UNLESS INDICATED OTHERWISE.

H. CONTRACTOR SHALL ENGAGE A QUALIFIED INDEPENDENT TESTING AND INSPECTING AGENCY TO SAMPLE MATERIALS, PERFORM TESTS, AND SUBMIT TEST REPORTS DURING CONCRETE PLACEMENT. TESTS WILL BE PERFORMED ACCORDING TO ACI 301. CAST AND LABORATORY CURE ONE SET OF FOUR STANDARD CYLINDERS FOR EACH COMPOSITE SAMPLE FOR EACH DAY'S POUR OF EACH CONCRETE MIX EXCEEDING 5 CU. YD., BUT LESS THAN 25 CU. YD., PLUS ONE SET FOR EACH ADDITIONAL 50 CU. YD. OR FRACTION THEREOF. PERFORM COMPRESSIVE-STRENGTH TESTS ACCORDING TO ASTM C 39. TEST TWO SPECIMENS AT 7 DAYS AND TWO SPECIMENS AT 28 DAYS. PERFORM SLUMP TESTING ACCORDING TO ASTM C 143. PROVIDE ONE TEST AT POINT OF PLACEMENT FOR EACH COMPOSITE SAMPLE, BUT NOT LESS THAN ONE TEST FOR EACH DAY'S POUR OF EACH CONCRETE MIX. PERFORM ADDITIONAL TESTS WHEN CONCRETE CONSISTENCY APPEARS TO CHANGE.

I. PROTECT FRESHLY PLACED CONCRETE FROM PREMATURE DRYING AND EXCESSIVE COLD OR HOT TEMPERATURES. IN HOT, DRY, AND WINDY WEATHER, APPLY AN EVAPORATION-CONTROL COMPOUND ACCORDING TO MANUFACTURER'S INSTRUCTIONS AFTER SCREENING AND BULL FLOATING, BUT BEFORE POWER FLOATING AND TROWELLING.

J. LIMIT MAXIMUM WATER-CEMENTITIOUS RATIO OF CONCRETE EXPOSED TO FREEZING, THAWING AND DEICING SALTS TO 0.45.

K. TEST RESULTS WILL BE REPORTED IN WRITING TO THE DESIGN ENGINEER, READY-MIX PRODUCER, AND CONTRACTOR WITHIN 24 HOURS AFTER TESTS. REPORTS OF COMPRESSIVE STRENGTH TESTS SHALL CONTAIN THE PROJECT IDENTIFICATION NAME AND NUMBER, DATE OF CONCRETE PLACEMENT, NAME OF CONCRETE TESTING SERVICE, CONCRETE TYPE AND CLASS, LOCATION OF CONCRETE BATCH IN STRUCTURE, DESIGN COMPRESSIVE STRENGTH AT 28 DAYS, CONCRETE MIX PROPORTIONS AND MATERIALS, COMPRESSIVE BREAKING STRENGTH, AND TYPE OF BREAK FOR BOTH 7-DAY TESTS AND 28-DAY TESTS.

32 30 00 LANDSCAPING AND SITE STABILIZATION

A. TOPSOIL: CONTRACTOR TO PROVIDE A MINIMUM OF 6" OF TOPSOIL FOR ALL DISTURBED OPEN AREAS. REUSE SURFACE SOIL STOCKPILED ON SITE AND SUPPLEMENT WITH IMPORTED OR MANUFACTURED TOPSOIL FROM OFF SITE SOURCES WHEN QUANTITIES ARE INSUFFICIENT. PROVIDE SOIL ANALYSIS BY A QUALIFIED SOIL TESTING LABORATORY AS REQUIRED TO VERIFY THE SUITABILITY OF SOIL TO BE USED AS TOPSOIL AND TO DETERMINE THE NECESSARY SOIL AMENDMENTS. TEST SOIL FOR PRESENCE OF ATRAZINE AND INFORM EXCEL ENGINEERING, INC. IF PRESENT PRIOR TO BIDDING PROJECT. TOPSOIL SHALL HAVE A PH RANGE OF 5.5 TO 7, CONTAIN A MINIMUM OF 5 PERCENT ORGANIC MATERIAL CONTENT, AND SHALL BE FREE OF STONES 1 INCH OR LARGER IN DIAMETER. ALL MATERIALS HARMFUL TO PLANT GROWTH SHALL ALSO BE REMOVED.

TOPSOIL INSTALLATION: LOOSEN SUBGRADE TO A MINIMUM DEPTH OF 6 INCHES AND REMOVE STONES LARGER THAN 1" IN DIAMETER. ALSO REMOVE ANY STICKS, ROOTS, RUBBISH, AND OTHER EXTRANEOUS MATTER AND DISPOSE OF THEM OFF THE PROPERTY. SPREAD TOPSOIL TO A DEPTH OF 6" BUT NOT LESS THAN WHAT IS REQUIRED TO MEET FINISHED GRADES AFTER LIGHT ROLLING AND NATURAL SETTLEMENT. DO NOT SPREAD TOPSOIL IF SUBGRADE IS FROZEN, MUDDY, OR EXCESSIVELY WET. GRADE PLANTING AREAS TO A SMOOTH, UNIFORM SURFACE PLANE WITH LOOSE, UNIFORMLY FINE TEXTURE. GRADE TO WITHIN 0.05 FEET OF FINISHED GRADE ELEVATION.

C. SEEDED LAWN MAINTENANCE: CONTRACTOR TO PROVIDE MAINTENANCE OF ALL LANDSCAPING FOR A PERIOD OF 90 DAYS FROM THE DATE OF INSTALLATION. AT THE END OF THE MAINTENANCE PERIOD, A HEALTHY, UNIFORM, CLOSE STAND OF GRASS SHOULD BE ESTABLISHED FREE OF WEEDS AND SURFACE IRREGULARITIES. LAWN COVERAGE SHOULD EXCEED 90% AND BARE SPOTS SHOULD NOT EXCEED 5"X5". CONTRACTOR SHOULD REESTABLISH LAWNS THAT DO NOT COMPLY WITH THESE REQUIREMENTS AND CONTINUE MAINTENANCE UNTIL LAWNS ARE SATISFACTORY.

E. TREES AND SHRUBS: FURNISH NURSERY-GROWN TREES AND SHRUBS WITH HEALTHY ROOT SYSTEMS DEVELOPED BY TRANSPLANTING OR ROOT PRUNING. PROVIDE WELL-SHAPED, FULLY BRANCHED, AND HEALTHY LOOKING STOCK. STOCK SHOULD ALSO BE FREE OF DISEASE, INSECTS, EGGS, LARVAE, AND DEFECTS SUCH AS KNOTS, SUN SCALD, INJURIES, ABRASIONS, AND DISFIGUREMENT. SEE THE LANDSCAPE PLAN FOR SPECIFIC SPECIE TYPE, SIZE, AND LOCATION.

F. TREE AND SHRUB INSTALLATION: EXCAVATE CIRCULAR PITS WITH SIDES SLOPED INWARD. TRIM BASE LEAVING CENTER AREA RAISED SLIGHTLY TO SUPPORT ROOT BALL. EXCAVATE PIT APPROXIMATELY THREE TIMES AS WIDE AS THE ROOT BALL DIAMETER. SET TREES AND SHRUBS PLUMB AND IN CENTER OF PIT WITH TOP OF BALL 1" ABOVE ADJACENT FINISHED GRADES. PLACE PLANTING SOIL MIX AROUND ROOT BALL IN LAYERS AND TAMP TO SETTLE MIX. WATER ALL PLANTS THOROUGHLY. PROVIDE TEMPORARY STAKING FOR TREES AS REQUIRED.

G. TREE AND SHRUB MAINTENANCE/WARRANTY: CONTRACTOR TO PROVIDE MAINTENANCE OF ALL LANDSCAPING FOR A PERIOD OF 90 DAYS FROM THE DATE OF INSTALLATION. MAINTENANCE TO INCLUDE REGULAR WATERING AS REQUIRED FOR SUCCESSFUL PLANT ESTABLISHMENT. CONTRACTOR TO PROVIDE 1 YEAR WARRANTY ON ALL TREES, SHRUBS, AND PERENNIALS.

H. MULCH: PROVIDE 3" MINIMUM THICK BLANKET OF MULCH AT ALL PLANTING AREAS INDICATED ON THE LANDSCAPE PLAN. INSTALL OVER NON-WOVEN WEED BARRIER FABRIC. TYPE AND COLOR BY OWNER.

EDGING: TYPE BY OWNER.

DIVISION 33 UTILITIES

33 10 00 SITE UTILITIES (DESIGN OF WATER, SANITARY, & STORM BY EXCEL)
A. CONTRACTOR TO FIELD VERIFY ALL EXISTING UNDERGROUND UTILITIES ON SITE. CONTRACTOR TO VERIFY PIPE LOCATIONS, SIZES, AND DEPTHS AT POINT OF PROPOSED CONNECTIONS AND VERIFY PROPOSED UTILITY ROUTES ARE CLEAR (PER CODE) OF ALL EXISTING UTILITIES AND OTHER OBSTRUCTIONS PRIOR TO CONSTRUCTION. COSTS INCURRED FOR FAILURE TO DO SO SHALL BE THE CONTRACTORS RESPONSIBILITY.

B. ALL PROPOSED SANITARY PIPE SHALL BE SDR-35 PVC

C. ALL PROPOSED WATER PIPE SHALL BE COPPER.

D. SEE UTILITY PLANS FOR ALL STORM PIPE MATERIAL TYPES TO BE USED.

E. SITE UTILITY CONTRACTOR SHALL RUN SANITARY SERVICE TO A POINT WHICH IS A MINIMUM OF 5' FROM THE EXTERIOR WALL OF THE FOUNDATION. SITE UTILITY CONTRACTOR SHALL RUN WATER SERVICE TO A POINT WITHIN THE FOUNDATION SPECIFIED BY THE PLUMBING PLANS. CONTRACTOR TO CUT AND CAP WATER SERVICE 12" ABOVE FINISHED FLOOR ELEVATION.

F. ALL UTILITIES SHALL BE INSTALLED WITH PLASTIC COATED TRACER WIRE (10 TO 14 GAUGE SOLID COPPER, OR COPPER COATED STEEL WIRE). PLASTIC WIRE MAY BE TAPED TO PLASTIC WATER OR SEWER PIPE. IF ATTACHED, THE TRACER WIRE SHALL BE SECURED EVERY 6 TO 20 FEET AND AT ALL BENDS. TRACER WIRE SHALL HAVE ACCESS POINTS AT LEAST EVERY 300 FEET.

G. ALL UTILITIES SHALL BE INSTALLED PER STATE, LOCAL, AND INDUSTRY STANDARDS. WATER, SANITARY, AND STORM SEWER SHALL BE INSTALLED PER "STANDARD SPECIFICATION FOR SEWER AND WATER CONSTRUCTION IN WISCONSIN". THE DESIGN ENGINEER SHALL BE RESPONSIBLE FOR OBTAINING STATE PLUMBING REVIEW APPROVAL. THE CONTRACTOR IS RESPONSIBLE FOR OBTAINING ALL OTHER PERMITS REQUIRED TO INSTALL WATER, SANITARY AND STORM SEWER.

H. SEE PLANS FOR ALL OTHER UTILITY SPECIFICATIONS AND DETAILS.

CIVIL COVER AND SPECIFICATION SHEET

EXCEL ENGINEERING inc.
100 CAMELOT DRIVE
FOND DU LAC, WI 54935
PHONE: (920) 926-9800
FAX: (920) 926-9801

Always a Better Plan

OWNER:
SOUTHGATE MARKETPLACE OUTLOT, LLC
10345 N. PORT WASHINGTON ROAD
SUITE 175
MEQUON, WI 53092

PROJECT:
3355 RETAIL
3355 27TH STREET
MILWAUKEE, WI

SHEET ISSUE:
JANUARY 27, 2012
SEE TITLE SHEET TO CONFIRM THAT THIS SHEET HAS BEEN ISSUED FOR CONSTRUCTION

REVISIONS:

JOB NUMBER:
1200960

SHEET
C1.0

2012 © EXCEL ENGINEERING, INC.

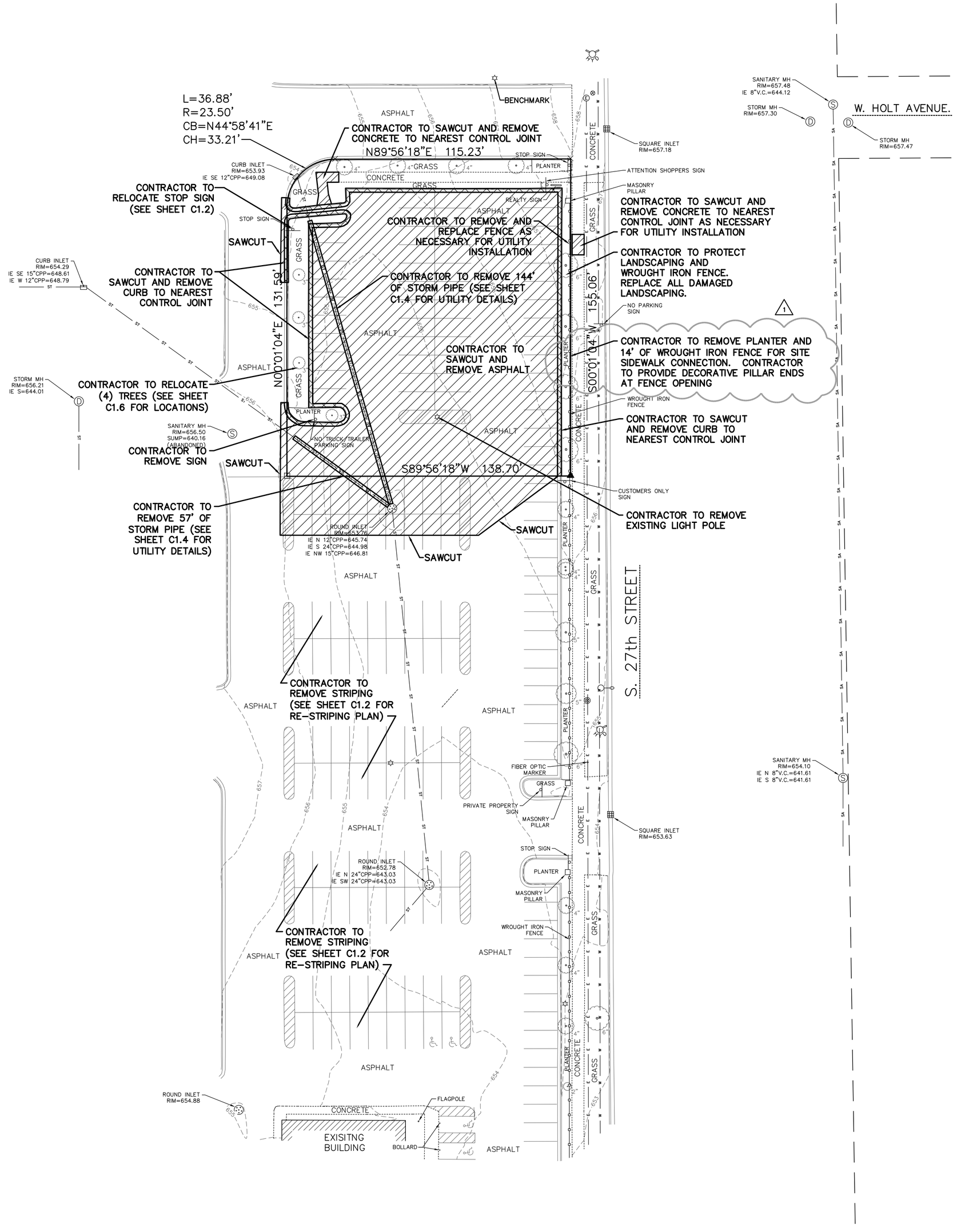

NOTE:
EXISTING UTILITIES SHOWN ARE INDICATED IN ACCORDANCE WITH AVAILABLE RECORDS AND FIELD MEASUREMENTS. THE CONTRACTOR SHALL BE RESPONSIBLE FOR OBTAINING EXACT LOCATIONS AND ELEVATIONS OF ALL UTILITIES, INCLUDING SEWER AND WATER FROM THE OWNERS OF THE RESPECTIVE UTILITIES. ALL UTILITY OWNERS SHALL BE NOTIFIED BY THE CONTRACTOR 72 HOURS PRIOR TO EXCAVATION.

NOTE:
THIS SURVEY MAY NOT REFLECT ALL UTILITIES, OR IMPROVEMENTS, IF SUCH ITEMS ARE HIDDEN BY LANDSCAPING, OR ARE COVERED BY SUCH ITEMS AS DUMPSTERS OR TRAILERS, OR WHEN THE SITE WAS COVERED WITH SNOW. THERE WAS APPROXIMATELY 2" OF SNOW COVER AFFECTING FIELD PROCEDURES AT THE TIME OF SURVEY.

NOTE:
AN UPDATED SURVEY AND TITLE SEARCH HAVE NOT BEEN AUTHORIZED AND THE BOUNDARY AND EASEMENTS SHOWN ON THIS PLAN MAY BE INCOMPLETE OR IN ERROR.

BENCHMARK
(NGVD-1929)

CUT "X" ON SOUTH SIDE OF LIGHT POLE BASE LOCATED APPROXIMATELY 100' WEST OF S. 27th STREET AND W. HOLT STREET INTERSECTION.
ELEVATION=659.44

NORTH

EXISTING SITE AND DEMOLITION PLAN

SCALE: 1"=30'-0"

1"= 30' SCALE 30' 0 30' 60' FEET

EXCEL ENGINEERING inc.
100 CAMELOT DRIVE
FOND DU LAC, WI 54935
PHONE: (920) 926-9800
FAX: (920) 926-9801

Always a Better Plan

OWNER:
SOUTHGATE MARKETPLACE OUTLOT, LLC
10345 N. PORT WASHINGTON ROAD
SUITE 175
MEQUON, WI 53092

PROJECT:
3355 RETAIL
3355 27TH STREET
MILWAUKEE, WI

SHEET ISSUE:
JANUARY 27, 2012
SEE TITLE SHEET TO CONFIRM THAT THIS SHEET HAS BEEN ISSUED FOR CONSTRUCTION

REVISIONS:
1 FEBRUARY 6, 2012

JOB NUMBER:
1200960

SHEET
C1.1

2012 © EXCEL ENGINEERING, INC.

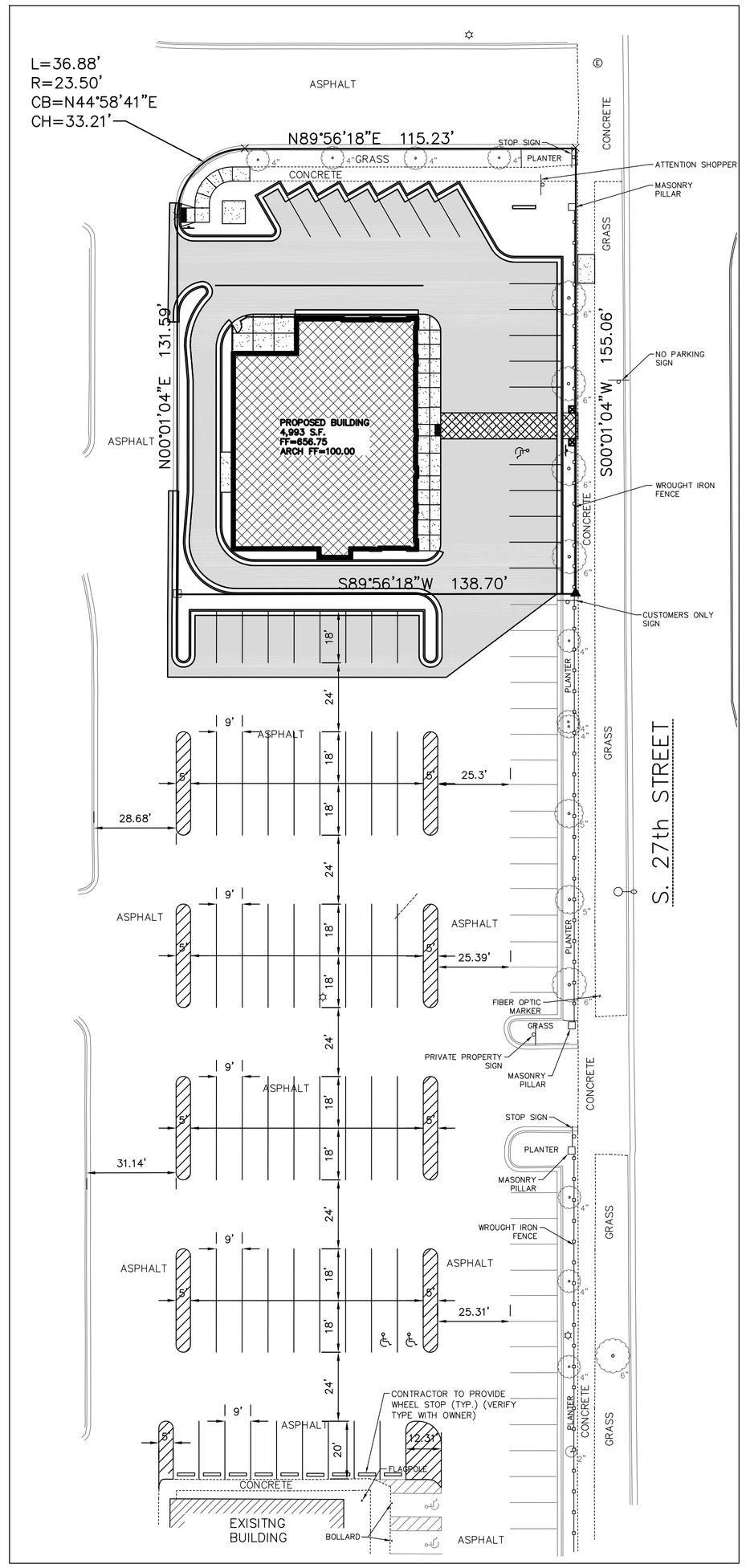

STRIPING PLAN

SCALE: 1"=30'-0"

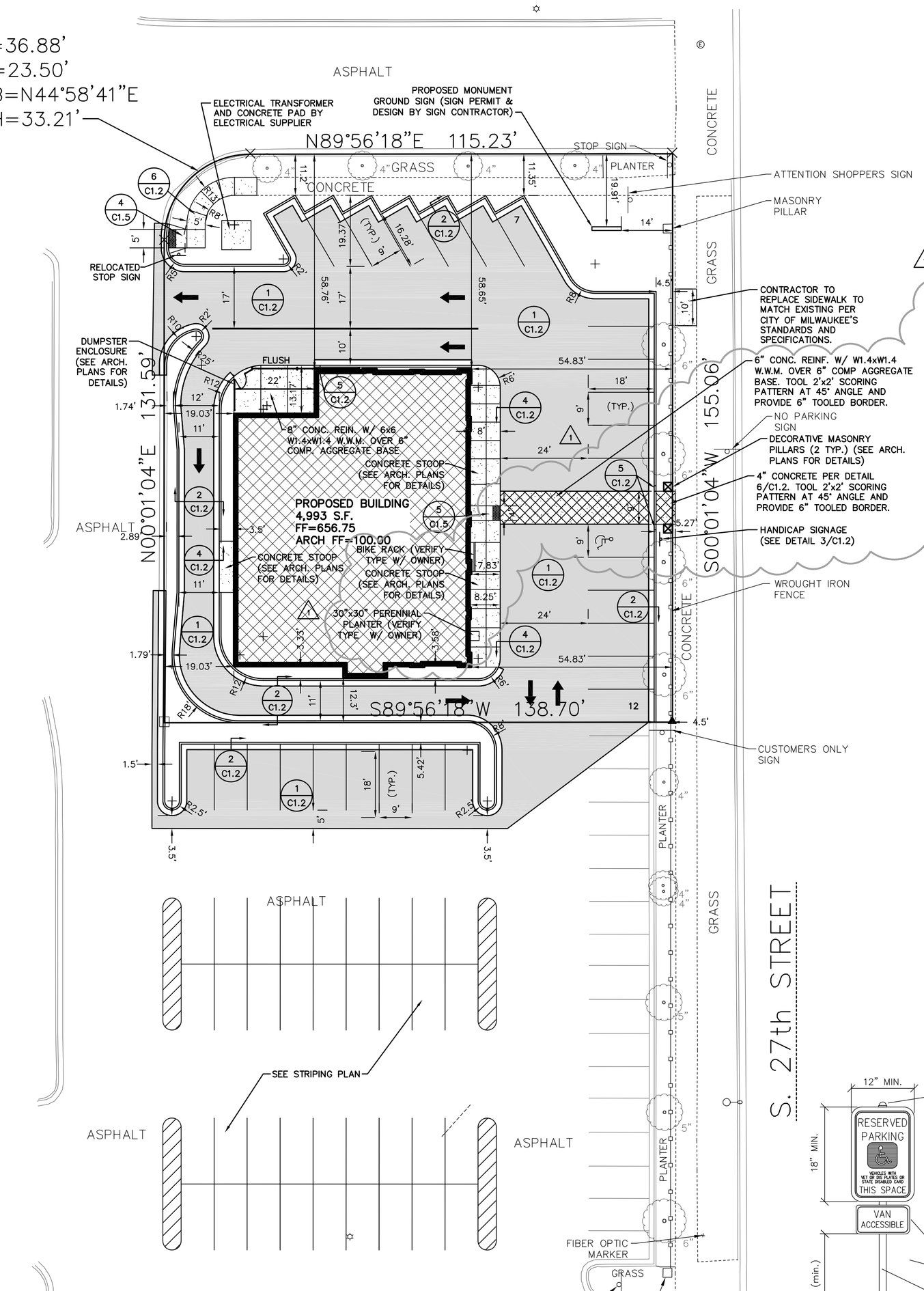

SITE INFORMATION:

PROPERTY AREA: AREA = 21,388 S.F. (0.49 ACRES).
EXISTING ZONING: PD – PLANNED DEVELOPMENT
PROPOSED ZONING: PD – PLANNED DEVELOPMENT
PROPOSED USE: RETAIL
AREA OF SITE DISTURBANCE: 23,375 S.F. (0.54 ACRES)
PROPOSED BUILDING HEIGHT: 26'-8"
PARKING PROVIDED ON PROPERTY: 19 SPACES
HANDICAP STALLS REQUIRED: 1, HANDICAP STALLS PROVIDED: 1
BUILDING OCCUPANCY CLASSIFICATION = A2 (ASSEMBLY)
CLASS OF BUILDING CONSTRUCTION = VB

PARKING INFORMATION

EXISTING WAL-MART PARKING:

STANDARD SPACES:	877
ACCESSIBLE SPACES:	25
CART CORRALS:	20
TOTAL:	922

PROPOSED WAL-MART PARKING:

STANDARD SPACES:	846
ACCESSIBLE SPACES:	26
CART CORRALS:	20
TOTAL:	892

EXISTING OUTLOT PARKING:

STANDARD SPACES:	49
ACCESSIBLE SPACES:	0

PROPOSED OUTLOT PARKING:

STANDARD SPACES:	18
ACCESSIBLE SPACES:	1

EXISTING SITE DATA

	AREA (AC)	AREA (SF)	RATIO
PROJECT SITE	0.49	21,388	
BUILDING FLOOR AREA	0	0	0%
PAVEMENT (ASP. & CONC.)	0.42	18,223	85.7%
TOTAL IMPERVIOUS	0.42	18,223	85.7%
LANDSCAPE/OPEN SPACE	0.07	3,165	14.3%

PROPOSED SITE DATA

	AREA (AC)	AREA (SF)	RATIO
PROJECT SITE	0.49	21,388	
BUILDING FLOOR AREA	0.11	4,993	22.5%
PAVEMENT (ASP. & CONC.)	0.30	12,938	61.2%
TOTAL IMPERVIOUS	0.41	17,931	83.7%
LANDSCAPE/OPEN SPACE	0.08	3,457	16.3%

PROJECT NOTES

GENERAL NOTES:

1. CONSTRUCTION STAKING SHALL BE COMPLETED BY EXCEL ENGINEERING. CONTRACTOR TO CONTACT RYAN WILGREEN AT 920-926-9800 TO GET STAKING PRICE TO INCLUDE IN BID TO OWNER. STAKING SHALL BE COMPLETED BY EXCEL AS REQUESTED BY THE CONTRACTOR. THE CONTRACTOR WILL BE INVOICED BY EXCEL ENGINEERING AT THE STANDARD TIME AND MATERIAL RATES UP TO THE AGREED STAKING ALLOWANCE. PAYMENT OF STAKING COSTS BEYOND THE ALLOWANCE DUE TO RESTAKING WILL BE THE RESPONSIBILITY OF THE CONTRACTOR, NOT THE OWNER. CAD DRAWING FILES AND SURVEY CONTROL WILL NOT BE PROVIDED FOR STAKING PURPOSES.
2. ALL DRIVEWAYS AND CURB CUTS TO BE CONSTRUCTED ACCORDING TO LOCAL ORDINANCES. CONTRACTOR TO OBTAIN ALL NECESSARY PERMITS.
3. THE CONTRACTOR IS RESPONSIBLE FOR OBTAINING ALL LOCAL EROSION CONTROL PERMITS AND WORK IN ROW PERMITS.

PLAN NOTES:

1. 4" WIDE YELLOW STRIPING FOR PARKING STALLS, TRAFFIC LANE, AND NO PARKING AREAS. YELLOW PAINT MARKINGS FOR H.C. ACCESSIBLE SYMBOLS, TRAFFIC ARROWS, AND TRAFFIC MESSAGE.

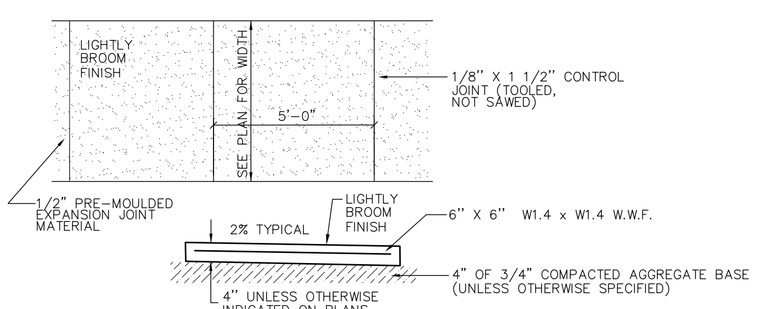

6 / C1.2 CONCRETE SIDEWALK
NO SCALE

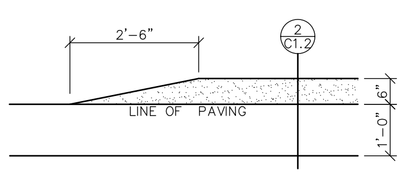

5 / C1.2 TAPERED CURB DETAIL
NO SCALE

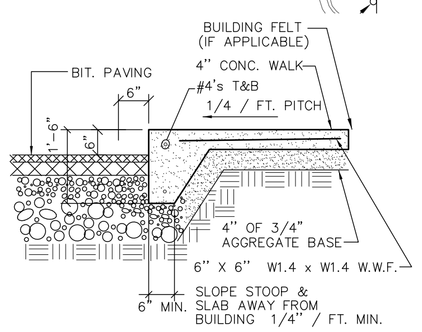

4 / C1.2 RAISED WALK DETAIL
NO SCALE

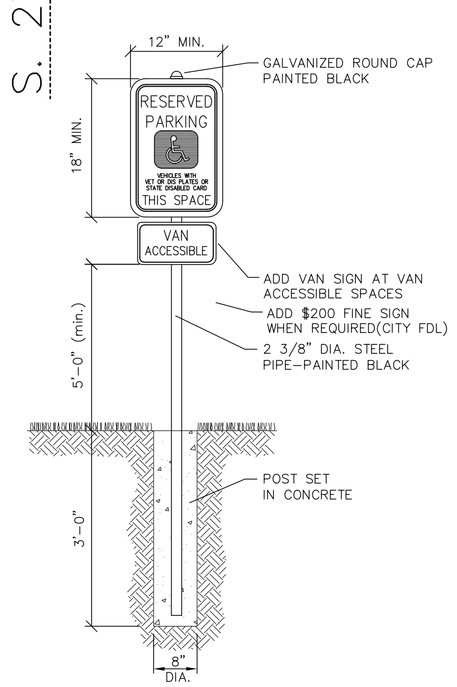

3 / C1.2 HANDICAP SIGNAGE DETAIL
NO SCALE

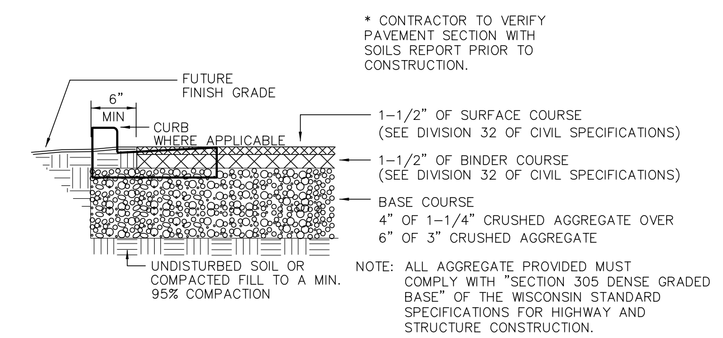

1 / C1.2 STANDARD ASPHALT PAVING DETAIL
NO SCALE

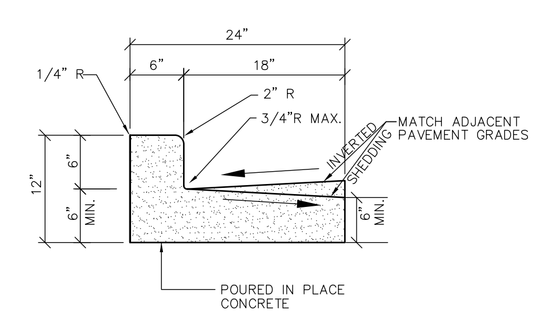

2 / C1.2 24" CONCRETE CURB & GUTTER DETAIL
NO SCALE

SITE PLAN

SCALE: 1"=20'-0"

EXCEL ENGINEERING inc.
100 CAMELOT DRIVE
FOND DU LAC, WI 54935
PHONE: (920) 926-9800
FAX: (920) 926-9801

Always a Better Plan

OWNER:
SOUTHGATE MARKETPLACE OUTLOT, LLC
10345 N. PORT WASHINGTON ROAD
SUITE 175
MEQUON, WI 53092

PROJECT:
3355 RETAIL
3355 27TH STREET
MILWAUKEE, WI

SHEET ISSUE:
JANUARY 27, 2012
SEE TITLE SHEET TO CONFIRM THAT THIS SHEET HAS BEEN ISSUED FOR CONSTRUCTION

REVISIONS:
1 FEBRUARY 6, 2012

JOB NUMBER:
1200960

SHEET
C1.2

2012 © EXCEL ENGINEERING, INC.

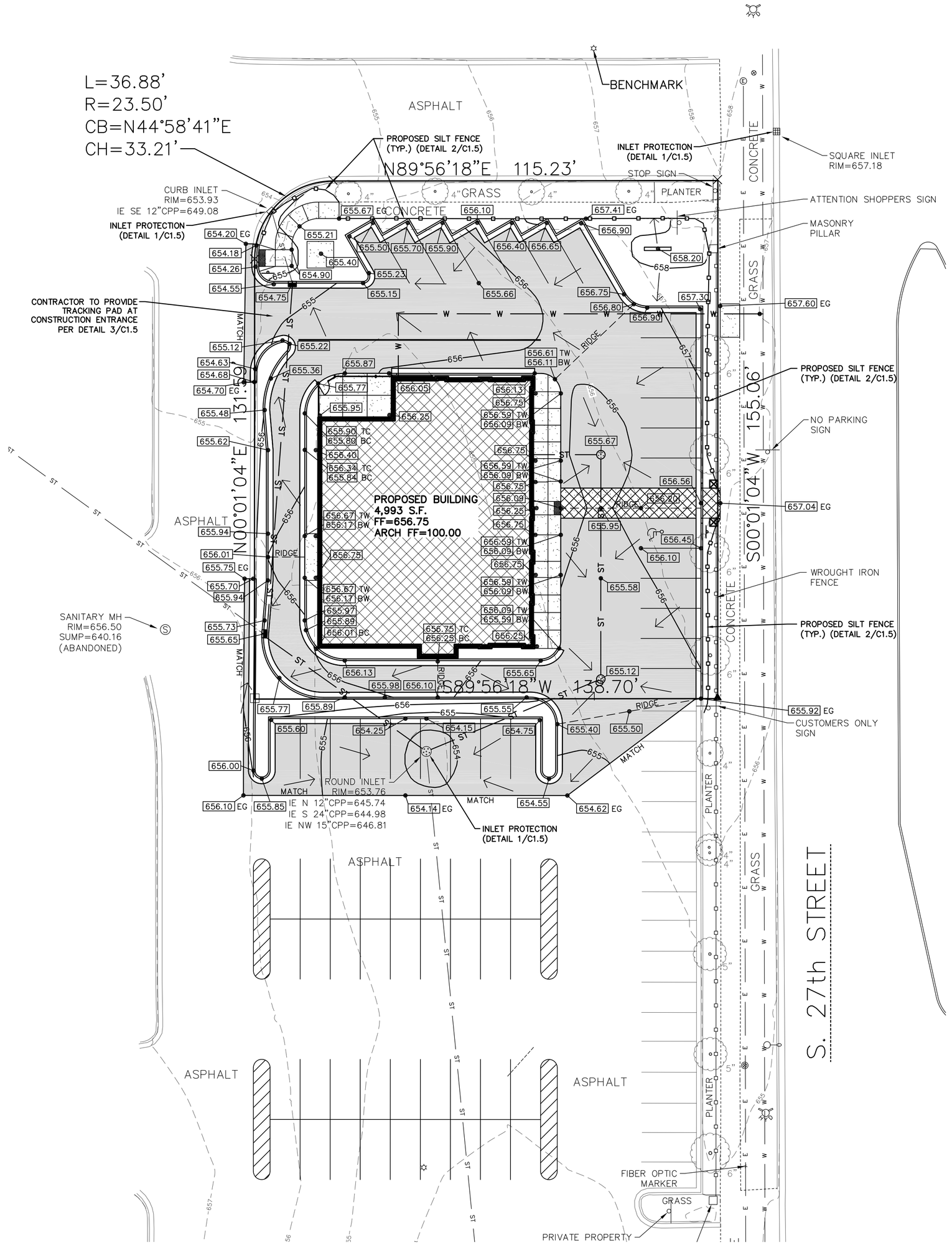

EROSION CONTROL/SITE DEWATERING NOTES

EROSION CONTROL SHALL STRICTLY COMPLY WITH THE EROSION CONTROL GUIDELINES AND REQUIREMENTS SET FORTH IN WISCONSIN ADMINISTRATIVE CODE (W.A.C.) NR 151, THE STATE OF WISCONSIN DEPARTMENT OF NATURAL RESOURCES RUNOFF MANAGEMENT PERFORMANCE STANDARDS. THE METHODS AND TYPES OF EROSION CONTROL WILL BE DEPENDENT ON THE LOCATION AND TYPE OF WORK INVOLVED. ALL SEDIMENT CONTROL MEASURES SHALL BE ADJUSTED TO MEET FIELD CONDITIONS AT THE TIME OF CONSTRUCTION, AND INSTALLED PRIOR TO ANY GRADING OR DISTURBANCE OF EXISTING SURFACE MATERIAL.

DUST CONTROL MEASURES SHALL BE PROVIDED TO REDUCE OR PREVENT THE SURFACE AND AIR TRANSPORT OF DUST DURING CONSTRUCTION. CONTROL MEASURES INCLUDE APPLYING MULCH AND ESTABLISHING VEGETATION, WATER SPRAYING, SURFACE ROUGHENING, APPLYING POLYMERS, SPRAY–ON TACKIFIERS, CHLORIDES, AND BARRIERS. SOME SITES MAY REQUIRE AN APPROACH THAT UTILIZES A COMBINATION OF MEASURES FOR DUST CONTROL.

STONE TRACKING PADS SHALL BE PLACED ON SITE AND SHALL BE INSTALLED PRIOR TO ANY TRAFFIC LEAVING THE SITE. THE AGGREGATE USED SHALL BE 3 TO 6 INCH CLEAR OR WASHED STONE, AND SHALL BE PLACED IN A LAYER AT LEAST 12 INCHES THICK. THE TRACKING PAD SHALL BE THE FULL WIDTH OF THE EGRESS POINT, AND SHALL BE A MINIMUM OF 50 FEET LONG.

STORM DRAIN INLET PROTECTION SHALL BE PROVIDED FOR ALL CATCH BASINS, AND CURB INLETS. TYPE B OR C PROTECTION SHOULD BE PROVIDED AND SHALL BE IN CONFORMANCE WITH THE WISCONSIN DEPARTMENT OF TRANSPORTATION STANDARD DETAIL DRAWING 8 E 10–2.

ALL SILT FENCE SHALL BE PLACED ON SITE AND SHALL BE IN CONFORMANCE WITH THE WISCONSIN DEPARTMENT OF TRANSPORTATION STANDARD DETAIL DRAWING 8 E 9–6.

THE USE, STORAGE, AND DISPOSAL OF CHEMICALS, CEMENT, AND OTHER COMPOUNDS AND MATERIALS USED ON SITE SHALL BE MANAGED DURING THE CONSTRUCTION PERIOD TO PREVENT THEIR TRANSPORT BY RUNOFF INTO WATERS OF THE STATE.

ALL EROSION CONTROL DEVICES SHALL AT A MINIMUM BE INSPECTED WEEKLY AND WITHIN 24 HOURS AFTER EVERY PRECIPITATION EVENT THAT PRODUCES 0.5 INCHES OF RAIN OR MORE DURING A 24 HOUR PERIOD. MAINTENANCE SHALL BE PERFORMED PER WISCONSIN ADMINISTRATIVE CODE (W.A.C.) NR 151 STORMWATER MANAGEMENT TECHNICAL STANDARD REQUIREMENTS.

TEMPORARY SITE RESTORATION SHALL TAKE PLACE IN DISTURBED AREAS THAT WILL NOT BE BROUGHT TO FINAL GRADE WITHIN A PERIOD OF ONE YEAR AND/OR LAND–DISTURBING ACTIVITIES THAT WILL NOT BE PERFORMED FOR A PERIOD GREATER THAN 7 DAYS.
PERMANENT RESTORATION APPLIES TO AREAS WHERE PERENNIAL VEGETATIVE COVER IS NEEDED TO PERMANENTLY STABILIZE AREAS OF EXPOSED SOIL. PERMANENT STABILILIZATION SHALL OCCUR WITHIN 3 WORKING DAYS OF FINAL GRADING. TOPSOIL, SEED, AND MULCH SHALL BE IN CONFORMANCE WITH WISCONSIN ADMINISTRATIVE CODE (W.A.C.) NR 151 STORMWATER MANAGEMENT TECHNICAL STANDARD REQUIREMENTS FOR TEMPORARY AND PERMANENT SEEDING.

ANY SOIL STOCKPILE THAT REMAINS FOR MORE THAN 30 DAYS SHALL BE COVERED OR TREATED WITH STABILIZATION PRACTICES SUCH AS TEMPORARY OR PERMANENT SEEDING AND MULCHING.

ALL OFF–SITE SEDIMENT DEPOSITS OCCURRING AS A RESULT OF CONSTRUCTION WORK OR A STORM EVENT SHALL BE CLEANED UP BY THE END OF EACH DAY. FLUSHING SHALL NOT BE ALLOWED.

ANY SOIL EROSION THAT OCCURS AFTER FINAL GRADING AND/OR THE APPLICATION OF STABILIZATION MEASURES MUST BE REPAIRED AND THE STABILIZATION WORK REDONE.

EROSION CONTROL MEASURES SHALL NOT BE REMOVED UNTIL THE AREA(S) SERVED HAVE ESTABLISHED VEGETATIVE COVER.

DEWATERING– IF SITE DEWATERING IS REQUIRED ON SITE THE FOLLOWING PROCEDURES SHALL BE USED.

1. FOLLOW WDNR CODE No. 1061 FOR DEWATERING.
2. ASSUMED SOIL AND TEXTURE CLASSIFICATION IN THIS AREA IS A SANDY LOAM (CONTRACTOR TO VERIFY IF DIFFERENT)
3. TYPE I GEOTEXTILE BAGS TO BE USED FRO THE DEWATERING WITH SANDY LOAM SOIL.
4. GEOTEXTILE BAGS SHALL BE SIZED ACCORDING TO THE PARTICLE SIZE BEING TRAPPED, EXPECTED FLOW OR PUMPING RATE (GPM) PER SQUARE FOOT OF FABRIC AND A 50% CLOGGING FACTOR. THE FOOTPRINT OF THE BAG SHALL BE NO SMALLER THAN 100 SQUARE FEET.
5. WDNR APPROVED POLYMERS CAN BE USED TO ENHANCE THE EFFICIENCY OF THE BAGS.
6. SEDIMENT SHALL BE REMOVED FROM DEVICES TO MAINTAIN EFFECTIVENESS. ALL SEDIMENT COLLECTED IN DEWATERING DEVICES SHALL BE PROPERLY DISPOSED OF TO PREVENT DISCHARGE TO WATERS OF THE STATE.
7. THE FOLLOWING MONITORING SHALL BE CONDUCTED. TEST RESULTS SHALL BE RECORDED ON A DAILY LOG KEPT ON SITE:
   - DISCHARGE DURATION AND SPECIFIED PUMPING RATE.
   - OBSERVED WATER TABLE AT TIME OF DEWATERING
   - IF USED, TYPE AND AMOUNT OF CHEMICAL USED FOR pH ADJUSTMENT.
   - IF USED, TYPE AND AMOUNT OF POLYMER USED FOR TREATMENT.
   - MAINTENANCE ACTIVITIES.

NORTH

GRADING AND EROSION CONTROL PLAN

SCALE: 1"=20'–0"

1"= 20' SCALE — 20' 0 20' 40' FEET

EXCEL ENGINEERING inc.
100 CAMELOT DRIVE
FOND DU LAC, WI 54935
PHONE: (920) 926-9800
FAX: (920) 926-9801

Always a Better Plan

OWNER:
SOUTHGATE MARKETPLACE OUTLOT, LLC
10345 N. PORT WASHINGTON ROAD
SUITE 175
MEQUON, WI 53092

PROJECT:
3355 RETAIL
3355 27TH STREET
MILWAUKEE, WI

SHEET ISSUE:
JANUARY 27, 2012
SEE TITLE SHEET TO CONFIRM THAT THIS SHEET HAS BEEN ISSUED FOR CONSTRUCTION

REVISIONS:

JOB NUMBER:
1200960

SHEET
C1.3

2012 © EXCEL ENGINEERING, INC.

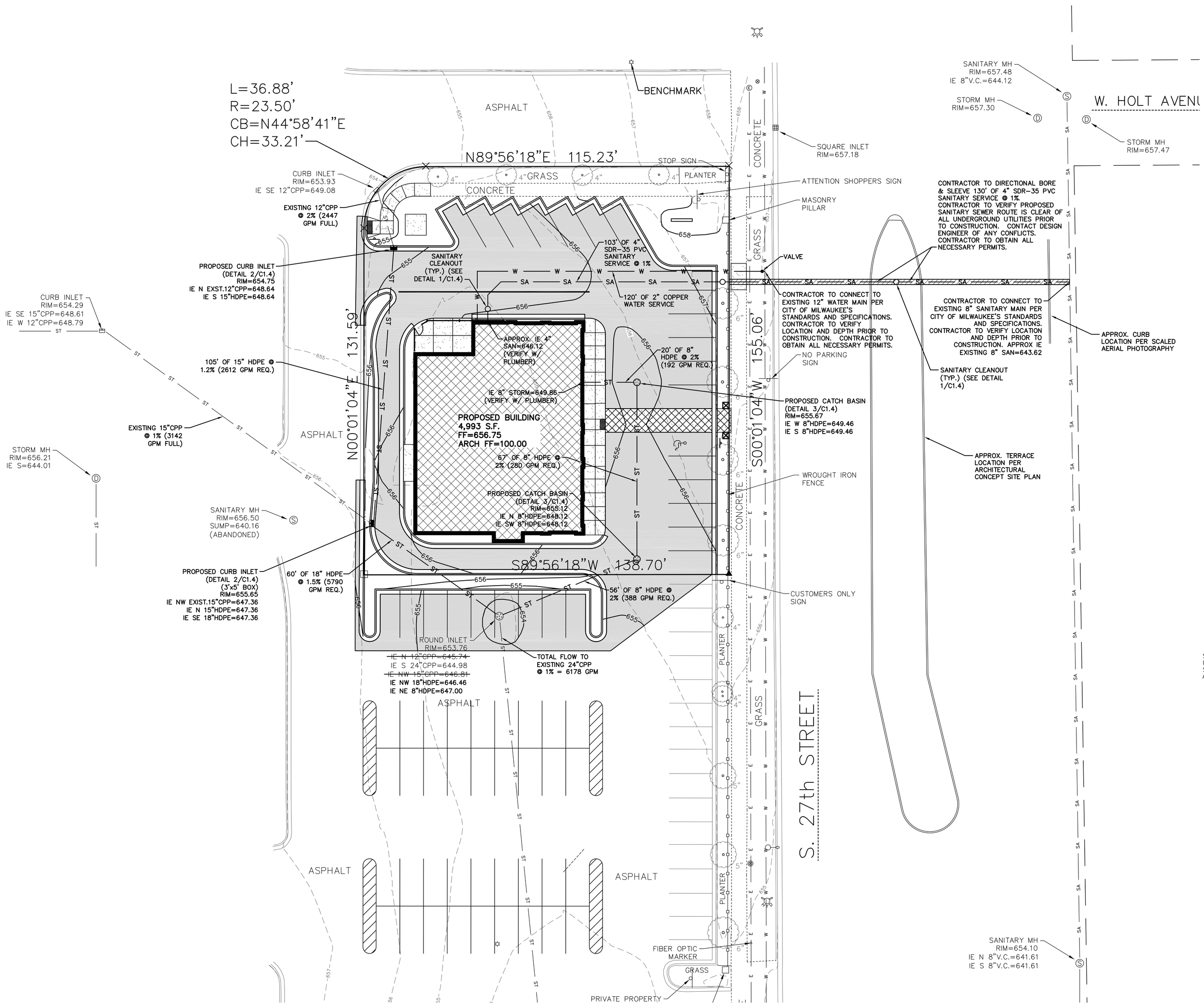

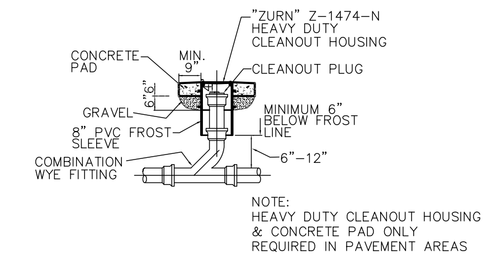

1 / C1.4 CLEANOUT TO GRADE DETAIL
NO SCALE

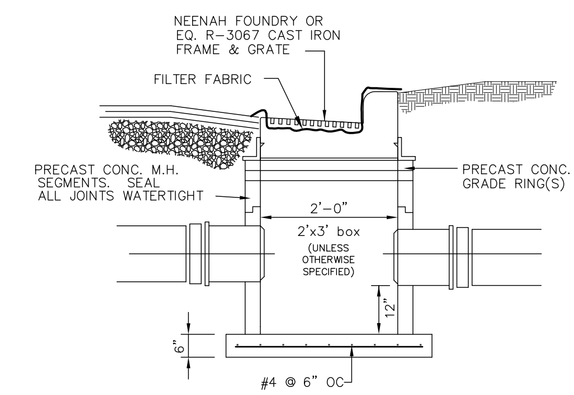

2 / C1.4 CURB INLET
NO SCALE

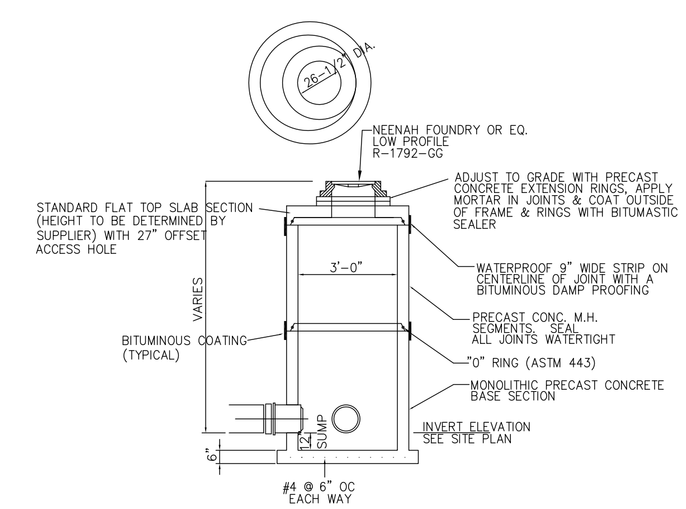

3 / C1.4 CATCH BASIN DETAIL
NO SCALE

SITE LIGHTING NOTE:
ALL SITE LIGHTING DESIGN AND APPROVAL BY SITE ELECTRICAL CONTRACTOR.

NOTE:
DESIGN, SIZE, AND LOCATION OF ALL EXTERIOR UTILITY SERVICES SHOULD BE VERIFIED BY THE PLUMBING CONTRACTOR PRIOR TO CONSTRUCTION.

NORTH

UTILITIES PLAN

SCALE: 1"=20'-0"

1"= 20' SCALE — 20' 0 20' 40' FEET

EXCEL ENGINEERING inc.
100 CAMELOT DRIVE
FOND DU LAC, WI 54935
PHONE: (920) 926-9800
FAX: (920) 926-9801

Always a Better Plan

OWNER:
SOUTHGATE MARKETPLACE OUTLOT, LLC
10345 N. PORT WASHINGTON ROAD
SUITE 175
MEQUON, WI 53092

PROJECT:
3355 RETAIL
3355 27TH STREET
MILWAUKEE, WI

SHEET ISSUE:
JANUARY 27, 2012
SEE TITLE SHEET TO CONFIRM THAT THIS SHEET HAS BEEN ISSUED FOR CONSTRUCTION

REVISIONS:

JOB NUMBER:
1200960

SHEET
C1.4

2012 © EXCEL ENGINEERING, INC.

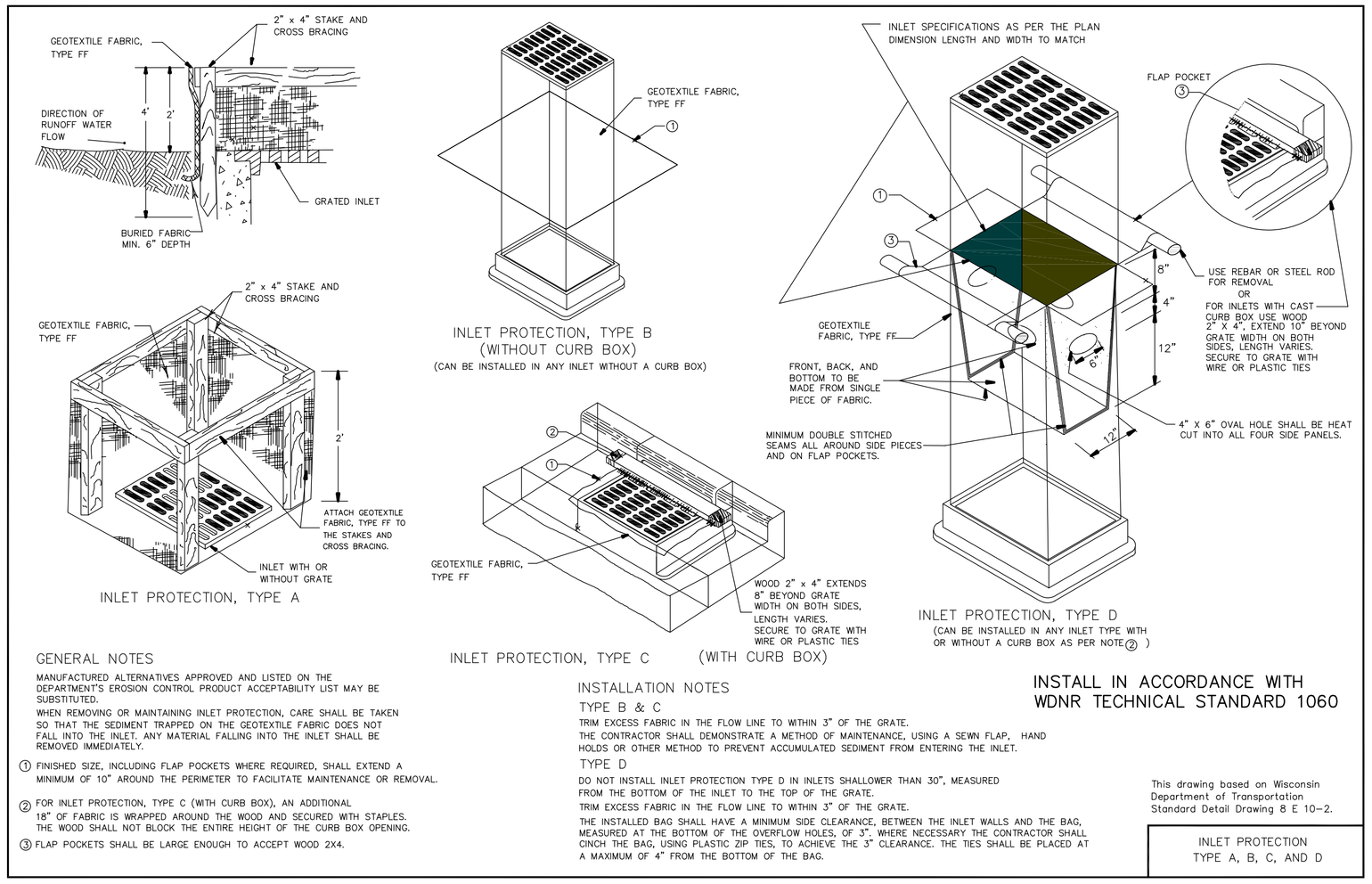

GENERAL NOTES

MANUFACTURED ALTERNATIVES APPROVED AND LISTED ON THE DEPARTMENT'S EROSION CONTROL PRODUCT ACCEPTABILITY LIST MAY BE SUBSTITUTED.

WHEN REMOVING OR MAINTAINING INLET PROTECTION, CARE SHALL BE TAKEN SO THAT THE SEDIMENT TRAPPED ON THE GEOTEXTILE FABRIC DOES NOT FALL INTO THE INLET. ANY MATERIAL FALLING INTO THE INLET SHALL BE REMOVED IMMEDIATELY.

1. FINISHED SIZE, INCLUDING FLAP POCKETS WHERE REQUIRED, SHALL EXTEND A MINIMUM OF 10" AROUND THE PERIMETER TO FACILITATE MAINTENANCE OR REMOVAL.
2. FOR INLET PROTECTION, TYPE C (WITH CURB BOX), AN ADDITIONAL 18" OF FABRIC IS WRAPPED AROUND THE WOOD AND SECURED WITH STAPLES. THE WOOD SHALL NOT BLOCK THE ENTIRE HEIGHT OF THE CURB BOX OPENING.
3. FLAP POCKETS SHALL BE LARGE ENOUGH TO ACCEPT WOOD 2X4.

INSTALLATION NOTES

TYPE B & C

TRIM EXCESS FABRIC IN THE FLOW LINE TO WITHIN 3" OF THE GRATE.
THE CONTRACTOR SHALL DEMONSTRATE A METHOD OF MAINTENANCE, USING A SEWN FLAP, HAND HOLDS OR OTHER METHOD TO PREVENT ACCUMULATED SEDIMENT FROM ENTERING THE INLET.

TYPE D

DO NOT INSTALL INLET PROTECTION TYPE D IN INLETS SHALLOWER THAN 30", MEASURED FROM THE BOTTOM OF THE INLET TO THE TOP OF THE GRATE.
TRIM EXCESS FABRIC IN THE FLOW LINE TO WITHIN 3" OF THE GRATE.
THE INSTALLED BAG SHALL HAVE A MINIMUM SIDE CLEARANCE, BETWEEN THE INLET WALLS AND THE BAG, MEASURED AT THE BOTTOM OF THE OVERFLOW HOLES, OF 3". WHERE NECESSARY THE CONTRACTOR SHALL CINCH THE BAG, USING PLASTIC ZIP TIES, TO ACHIEVE THE 3" CLEARANCE. THE TIES SHALL BE PLACED AT A MAXIMUM OF 4" FROM THE BOTTOM OF THE BAG.

INSTALL IN ACCORDANCE WITH WDNR TECHNICAL STANDARD 1060

This drawing based on Wisconsin Department of Transportation Standard Detail Drawing 8 E 10-2.

INLET PROTECTION TYPE A, B, C, AND D

1 / C1.5 INLET PROTECTION DETAILS
NO SCALE

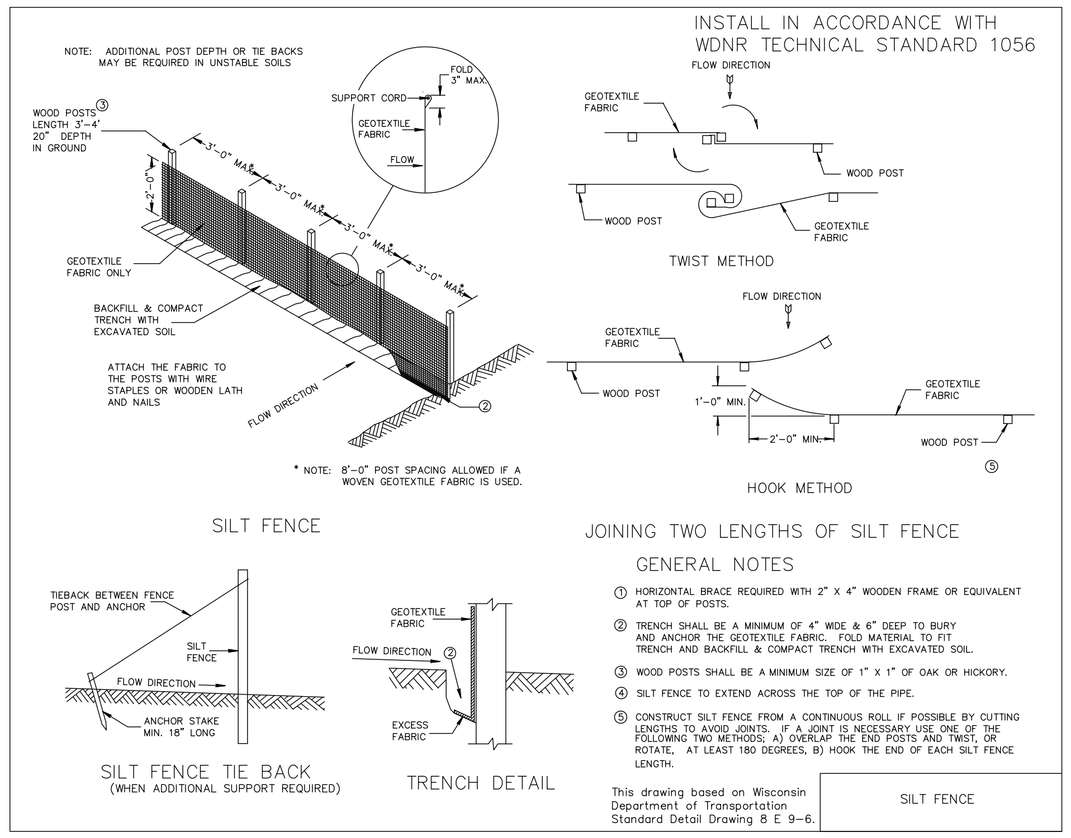

GENERAL NOTES

1. HORIZONTAL BRACE REQUIRED WITH 2" X 4" WOODEN FRAME OR EQUIVALENT AT TOP OF POSTS.
2. TRENCH SHALL BE A MINIMUM OF 4" WIDE & 6" DEEP TO BURY AND ANCHOR THE GEOTEXTILE FABRIC. FOLD MATERIAL TO FIT TRENCH AND BACKFILL & COMPACT TRENCH WITH EXCAVATED SOIL.
3. WOOD POSTS SHALL BE A MINIMUM SIZE OF 1" X 1" OF OAK OR HICKORY.
4. SILT FENCE TO EXTEND ACROSS THE TOP OF THE PIPE.
5. CONSTRUCT SILT FENCE FROM A CONTINUOUS ROLL IF POSSIBLE BY CUTTING LENGTHS TO AVOID JOINTS. IF A JOINT IS NECESSARY USE ONE OF THE FOLLOWING TWO METHODS: A) OVERLAP THE END POSTS AND TWIST, OR ROTATE, AT LEAST 180 DEGREES, B) HOOK THE END OF EACH SILT FENCE LENGTH.

This drawing based on Wisconsin Department of Transportation Standard Detail Drawing 8 E 9-6.

SILT FENCE

2 / C1.5 SILT FENCE – INSTALLATION DETAIL
NO SCALE

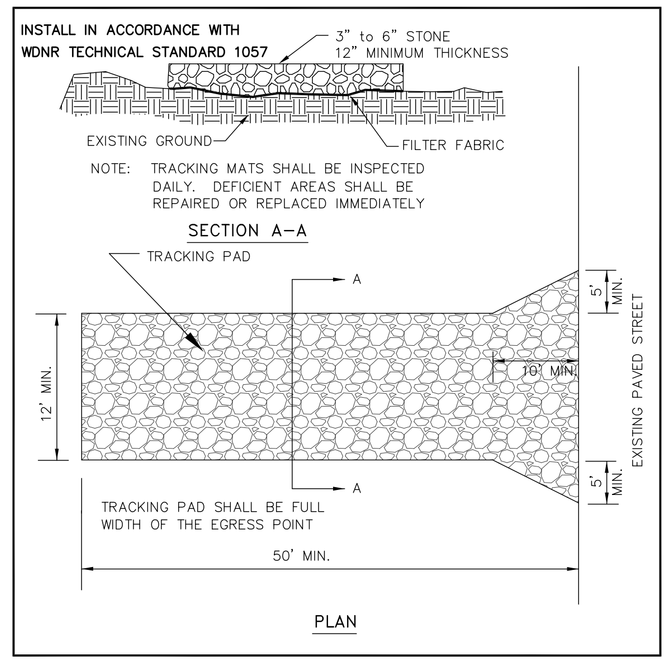

3 / C1.5 TRACKPAD DETAILS
NO SCALE

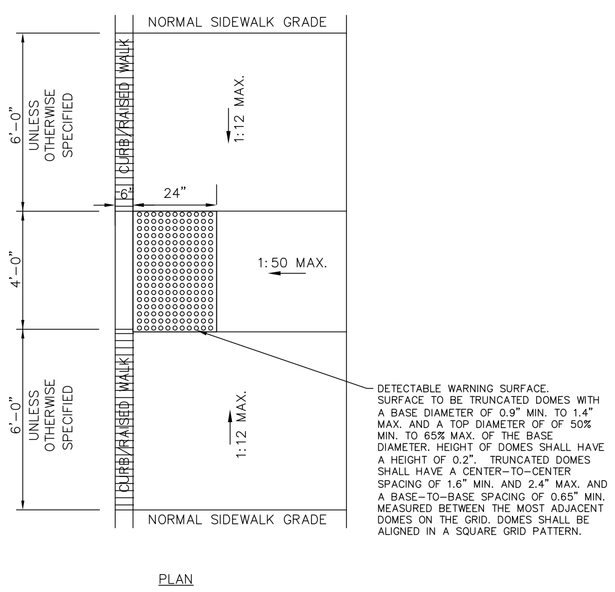

5 / C1.5 CURB RAMP DETAIL
NO SCALE

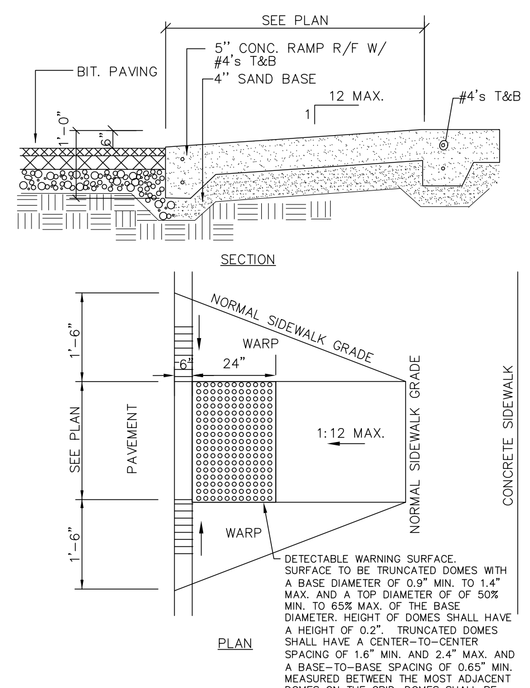

4 / C1.5 CURB RAMP DETAIL
NO SCALE

EROSION CONTROL/STORMWATER MANAGEMENT NOTES AND DETAILS

EXCEL ENGINEERING inc.
100 CAMELOT DRIVE
FOND DU LAC, WI 54935
PHONE: (920) 926-9800
FAX: (920) 926-9801

Always a Better Plan

OWNER:
SOUTHGATE MARKETPLACE OUTLOT, LLC
10345 N. PORT WASHINGTON ROAD
SUITE 175
MEQUON, WI 53092

PROJECT:
3355 RETAIL
3355 27TH STREET
MILWAUKEE, WI

SHEET ISSUE:
JANUARY 27, 2012
SEE TITLE SHEET TO CONFIRM THAT THIS SHEET HAS BEEN ISSUED FOR CONSTRUCTION

REVISIONS:

JOB NUMBER:
1200960

SHEET
C1.5

2012 © EXCEL ENGINEERING, INC.

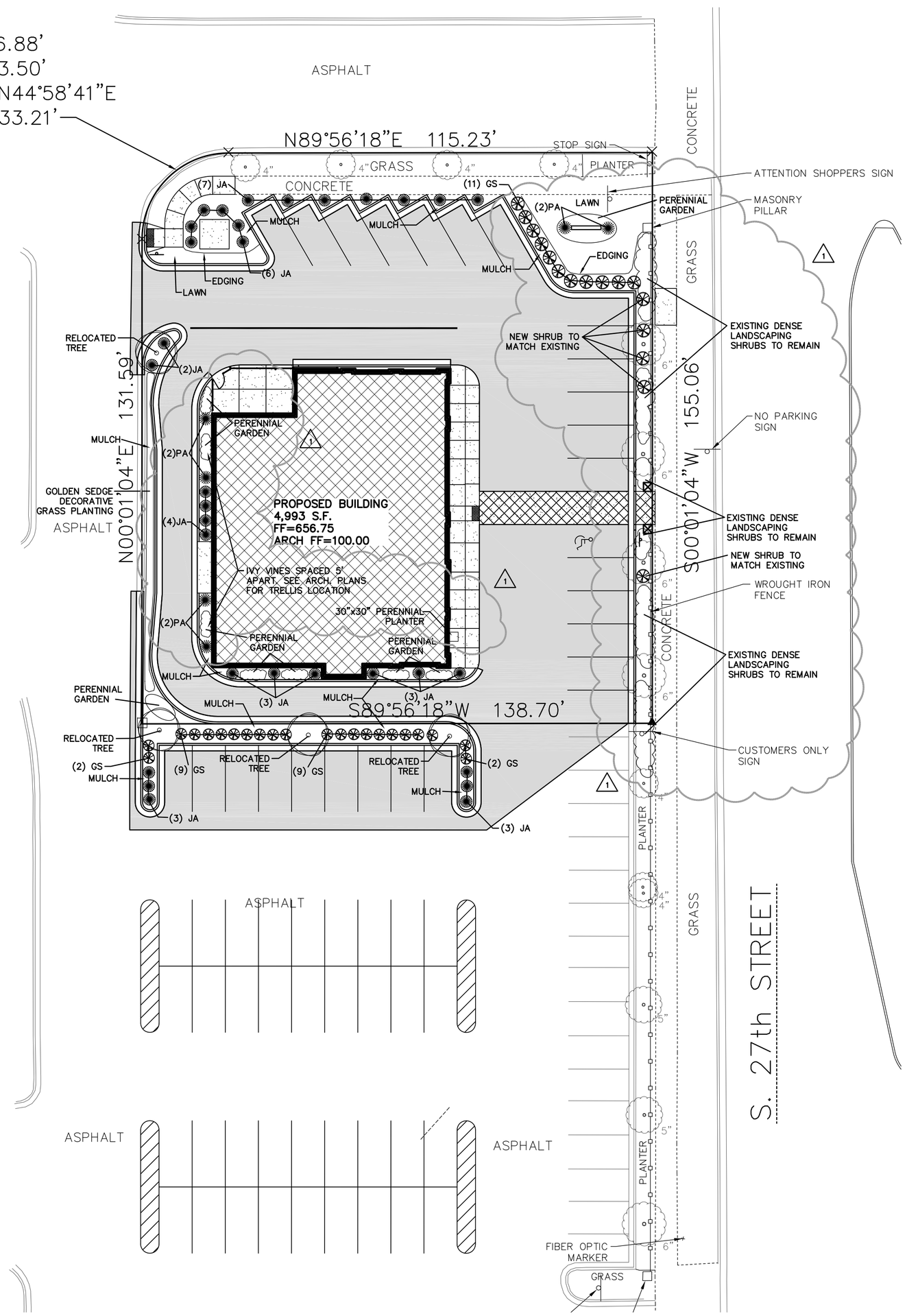

LANDSCAPING NOTES				
MARK	COMMON NAME	BOTANICAL NAME	PLANTED SIZE	NO. PROV'D
SMALL SHRUBS				
JA	Arcadia Juniper	Juniperus Sabina 'Arcadia'	24"	31
GS	Goldmound Spirea	Spirea 'Goldmound'	24"	33
EVERGREEN TREES				
PA	Pyramidal Arborvitae	Thuja occidentalis fastigata	5'	6

NOTE: MULCH AT ALL PLANTING AREAS (VERIFY TYPE WITH OWNER)

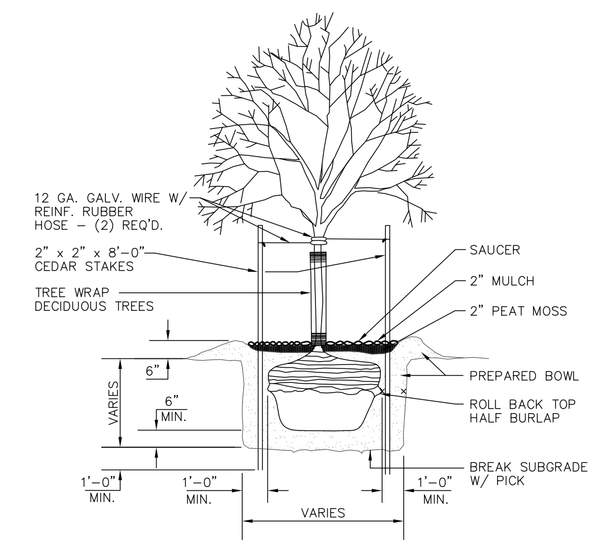

1 C1.6 TREE PLANTING DETAIL
NO SCALE

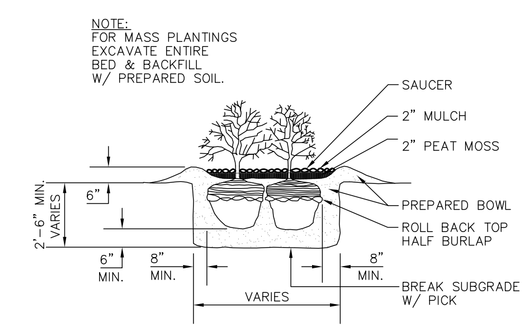

2 C1.6 SHRUB PLANTING DETAIL
NO SCALE

NORTH

LANDSCAPE PLAN
SCALE: 1"=20'-0"
1"= 20' SCALE 20' 0 20' 40' FEET

EXCEL ENGINEERING inc.
100 CAMELOT DRIVE
FOND DU LAC, WI 54935
PHONE: (920) 926-9800
FAX: (920) 926-9801

Always a Better Plan

OWNER:
SOUTHGATE MARKETPLACE OUTLOT, LLC
10345 N. PORT WASHINGTON ROAD
SUITE 175
MEQUON, WI 53092

PROJECT:
3355 RETAIL
3355 27TH STREET
MILWAUKEE, WI

SHEET ISSUE:
JANUARY 27, 2012
SEE TITLE SHEET TO CONFIRM THAT THIS SHEET HAS BEEN ISSUED FOR CONSTRUCTION

REVISIONS:
1 FEBRUARY 6, 2012

JOB NUMBER:
1200960

SHEET
C1.6

2012 © EXCEL ENGINEERING, INC.

PLOT DATE: 2/3/2012

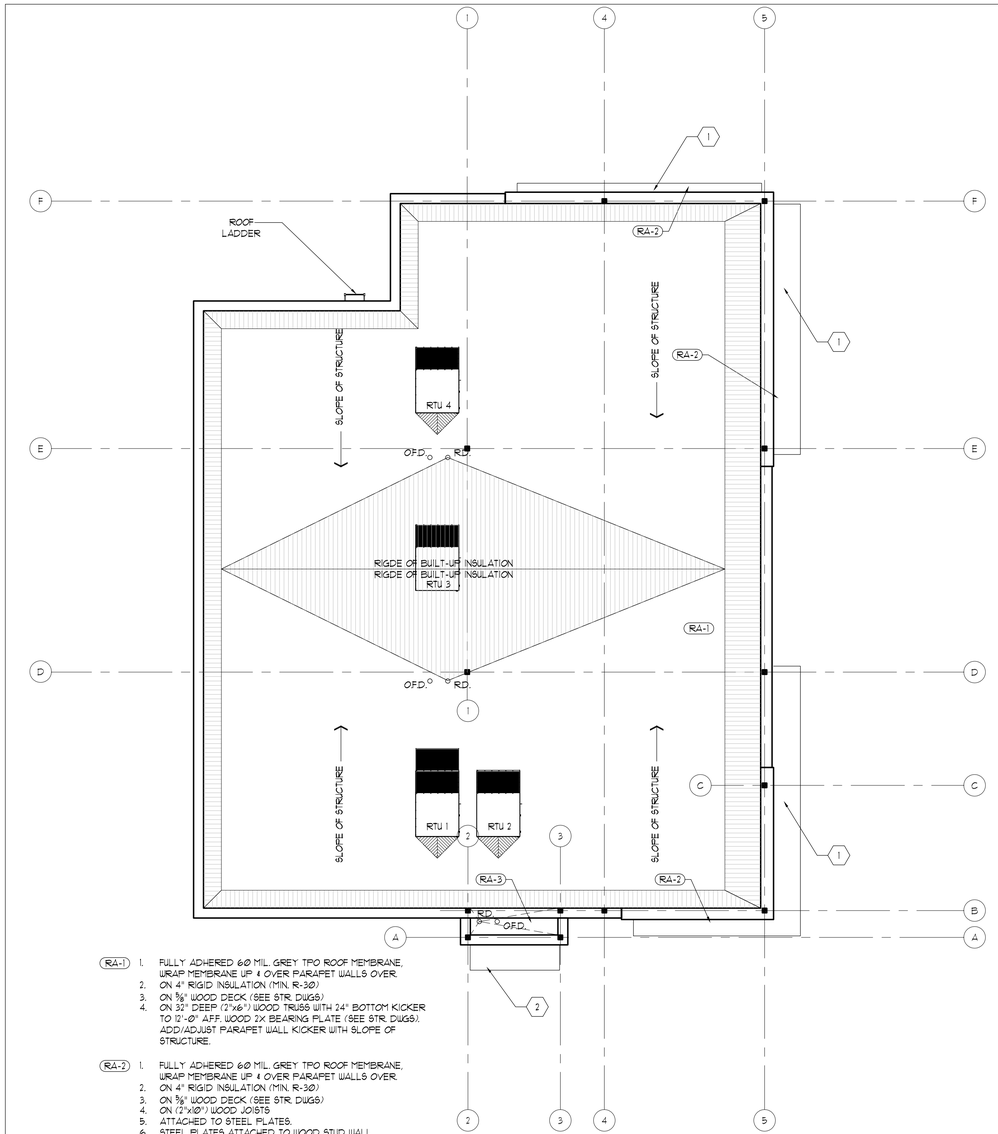

RA-1
1. FULLY ADHERED 60 MIL. GREY TPO ROOF MEMBRANE, WRAP MEMBRANE UP & OVER PARAPET WALLS OVER.
2. ON 4" RIGID INSULATION (MIN. R-30)
3. ON ⅝" WOOD DECK (SEE STR. DWGS)
4. ON 32" DEEP (2"x6") WOOD TRUSS WITH 24" BOTTOM KICKER TO 12'-0" A.F.F. WOOD 2X BEARING PLATE (SEE STR. DWGS). ADD/ADJUST PARAPET WALL KICKER WITH SLOPE OF STRUCTURE.

RA-2
1. FULLY ADHERED 60 MIL. GREY TPO ROOF MEMBRANE, WRAP MEMBRANE UP & OVER PARAPET WALLS OVER.
2. ON 4" RIGID INSULATION (MIN. R-30)
3. ON ⅝" WOOD DECK (SEE STR. DWGS)
4. ON (2"x10") WOOD JOISTS
5. ATTACHED TO STEEL PLATES.
6. STEEL PLATES ATTACHED TO WOOD STUD WALL.
7. SURROUND WITH (2"x12") WOOD JOIST AS RIM BOARD
8. WRAP EXPOSED RIM BOARD WITH BREAK METAL
9. ENCLOSE BOTTOM OF JOISTS WITH PAINTABLE ⅝" EXT. GRADE CEDAR BOARD
10. PROVIDE CONT. VENTING.

RA-3
1. FULLY ADHERED 60 MIL. GREY TPO ROOF MEMBRANE, WRAP MEMBRANE UP & OVER PARAPET WALLS OVER.
2. ON 4" RIGID INSULATION (MIN. R-30)
3. ON ⅝" WOOD DECK (SEE STR. DWGS)
4. ON (2"x12") WOOD JOISTS

(1) EDGE OF CANOPY (BELOW) - SEE SECTIONS AND ELEVATIONS DWGS. FOR DETAILS

(2) AWNING (BELOW) - SEE ELEVATIONS AND SECTIONS FOR MORE DETAILS.

PLAN NORTH

ROOF PLAN 2
SCALE: 1/8"=1'-0"

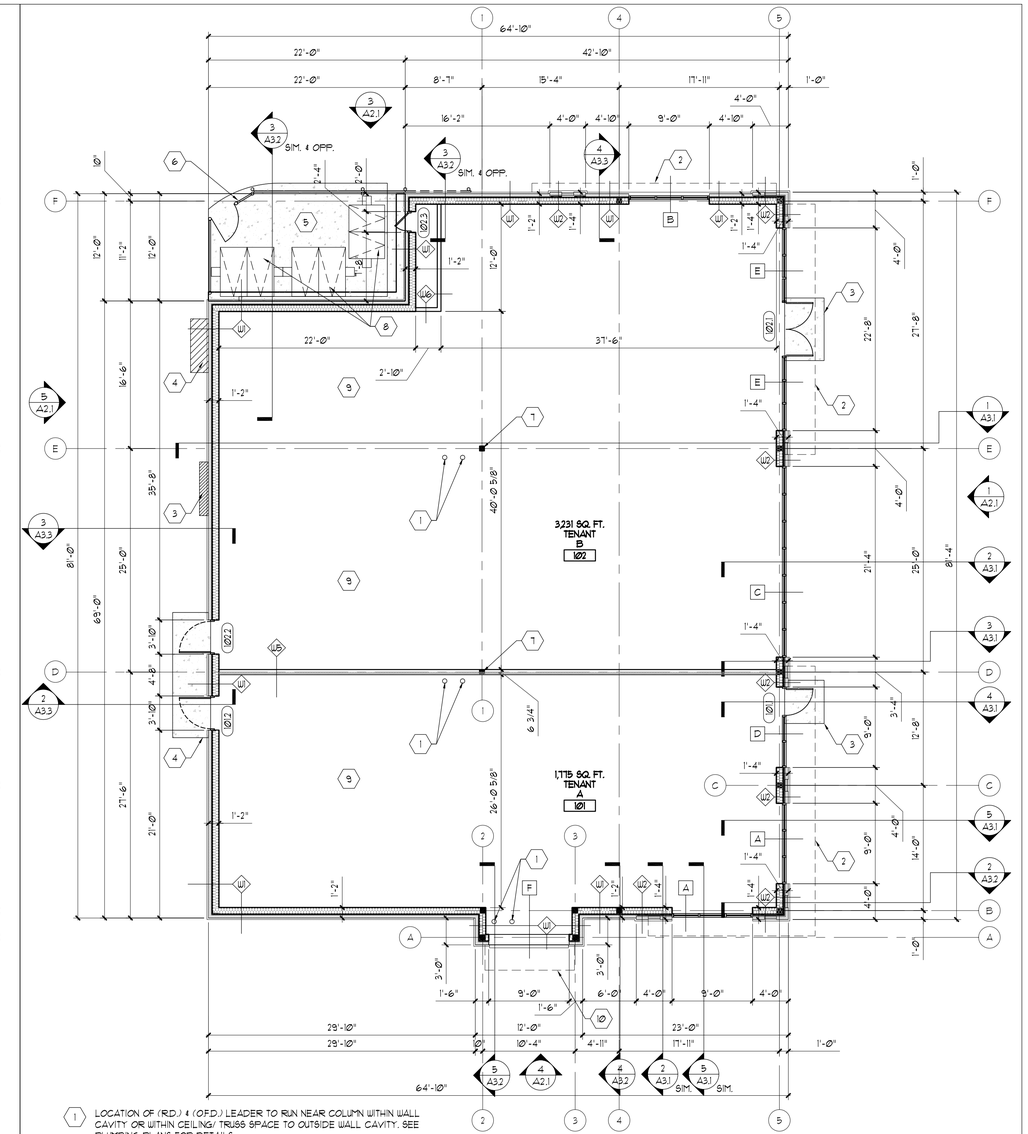

(1) LOCATION OF (R.D.) & (O.F.D.) LEADER TO RUN NEAR COLUMN WITHIN WALL CAVITY OR WITHIN CEILING/ TRUSS SPACE TO OUTSIDE WALL CAVITY. SEE PLUMBING PLANS FOR DETAILS.

(2) OVER HEAD CANOPY ABOVE. - SEE SECTIONS AND ELEVATIONS DWGS. FOR DETAILS

(3) CONCRETE FOOTING AND FOUNDATION FOR STOOP AT DOORS. SEE STR. DWGS. FOR DETAILS.

(4) APPROX. LOCATION OF GAS AND ELECTRICAL METERS. FINAL LOCATION T.B.D. BY DESIGN-BUILD SUBCONTRACTOR.

(5) 5" CONCRETE SLAB WITH POURED IN PLACE 12" DEEP x 6" TALL CONCRETE CURB AT BUILDING TO PROVIDE HOLD-OFF PROTECTION FROM ROLLING DUMPSTERS.

(6) TRASH ENCLOSURE SYSTEM. REFER TO "U" ON THE BUILDING ELEVATION FOR MORE DETAILS.

(7) INTERIOR STEEL COLUMN. SEE STR. PLANS FOR DETAILS.

(8) ROLLING DUMPSTERS, SHOWN FOR LOCATION PURPOSES ONLY. PROVIDED BY OTHERS.

(9) CONCRETE FLOOR SLAB. SEE STR. DWGS FOR DETAILS.

(10) AWNING (ABOVE) - SEE ELEVATIONS AND SECTIONS FOR MORE DETAILS.

PLAN NORTH

FLOOR PLAN 1
SCALE: 1/8"=1'-0"

DO NOT SCALE THIS SHEET

FULL SIZE PRINT = 24" x 36" SHEET

COPYRIGHT PERSPECTIVE DESIGN, INC. 2012 ALL RIGHTS RESERVED - THIS DRAWING IS NOT TO BE REPRODUCED, CHANGED, COPIED OR ASSIGNED TO ANY THIRD PARTY IN ANY FORM OR MANNER WITHOUT FIRST OBTAINING THE EXPRESSED WRITTEN PERMISSION OF PERSPECTIVE DESIGN, INC. THE CLIENT AGREES TO INDEMNIFY AND HOLD THE ARCHITECT HARMLESS FROM ANY DAMAGES, LIABILITY, OR COST, INCLUDING ATTORNEY'S FEES AND COSTS OF DEFENSE ARISING FROM ANY CHANGES OR ALTERATIONS MADE BY ANYONE OTHER THAN THE ARCHITECT, OR FROM ANY REUSE OF THE DRAWINGS OR DATA WITHOUT THE PRIOR WRITTEN CONSENT OF THE ARCHITECT.

REV. #	REV. DATE	DESCRIPTION	REV. BY:
-	02/03/12	TENANT APPROVAL SET	WHC

Project:

Shoppes at Southgate
3355 27TH STREET
MILWAUKEE, WI

PERSPECTIVE DESIGN, INC.
11525 W. North Avenue
Wauwatosa, WI 53226
Tel (414) 302-1780 Fax (414) 302-1781

Drawing Title:
FLOOR PLAN

THIS BOX IS ½" x ½"

Date:	02/03/12
Scale:	A.N.
Drawn:	WHC
Job:	10-006
Sheet:	A1.1

NOT FOR CONSTRUCTION

FILE NAME: P:_PROJECTS\KVG-MIDLAND 27TH RETAIL\A101_12-006.DWG

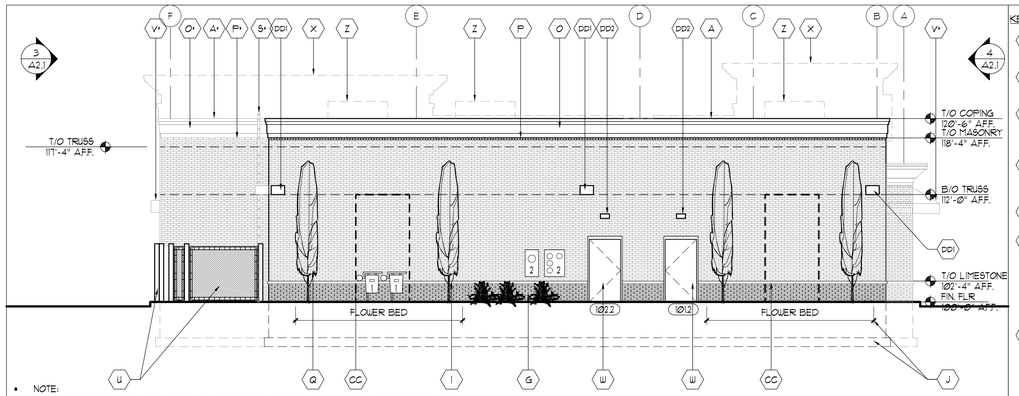

- NOTE:
  1. GAS METERS ARE SHOWN GRAPHIC REPRESENTATION ONLY AND ARE SUBJECT TO CHANGE.
  2. ELECTRIC SOCKET & METER(S) ARE SHOWN GRAPHIC REPRESENTATION ONLY AND ARE SUBJECT TO CHANGE.
  3. TREES / SHRUBS AND FLOWERS SHOWN FOR GRAPHIC PURPOSE- SEE LANDSCAPE PLANS FOR DETAILS.

WEST (REAR) ELEVATION 5

SCALE: 1/8" = 1'-0"

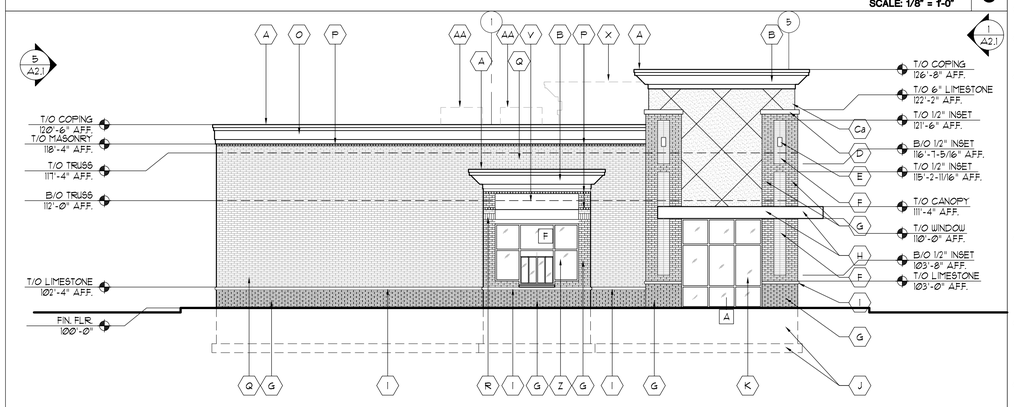

SOUTH (FRONT) ELEVATION 4

SCALE: 1/8" = 1'-0"

KEYED NOTES: - NOTES WITH A (••) DENOTES MATERIAL (ABOVE) / BEYOND

(A) PREFINISHED METAL COPING SYSTEM (PERMASNAP PLUS) BY HICKMAN. SLOPE T/O CAP TOWARDS ROOF. PROVIDE BLOCKING AS REQUIRED BY MANUFACTURER.
- COLOR: MATCH TO ALUM. STOREFRONT FRAMING COLOR

(B) E.I.F.S. COPING FASCIA.
- COLOR: MATCH TO LIGHT TONED BRICK
- TEXTURE: FINE

(C) E.I.F.S. WALL (FIELD)
- COLOR: MATCH TO LIGHT TONED BRICK
- TEXTURE: MEDIUM

(a) PROVIDE 1/8" WIDE X 1/8" DEEP V-GROOVE SCORE MARKS AT 45° ON 48: O.C. CENTERED ON LOGO

(D) 6" LIMSTONE PILASTER CAP
- COLOR: BEIGE / SAND
- PROVIDE TOP WITH SLOPE AWAY FROM BLDG.
- PROVIDE DRIP CUT

(E) LIGHT FIXTURE - WITH DOWNWARD THROW
- COLOR: MATCH TO ALUM. STOREFRONY FRAMING COLOR

(F) CLAY FACE BRICK (LIGHT TONE) WITH MANUF. RECOMMENDED SEAL
- MANUF: BELDEN BRICK CO.
- SIZE: MODULAR (3-⅝" x 2-¼" x 7-⅝")
- TEXTURE: VELOUR
- COLOR: TUMBLEWEED
- COURSE: STACK BOND
- RECESS: ½"
- MORTAR: MATCH TO MASONRY

(G) CLAY FACE BRICK (DARK TONE) WITH MANUF. RECOMMENDED SEAL
- MANUF: BELDEN BRICK CO.
- SIZE: MODULAR (3-⅝" x 2-¼" x 7-⅝")
- TEXTURE: BARK
- COLOR: CHOCOLATE BROWN
- COURSE: RUNNING BOND
- MORTAR: MATCH TO MASONRY

(H) WOOD FRAMED (OVERHEAD) CANOPY WITH PREFIISHED ARCHITCTURAL BREAK METAL COPING & METAL FASCIA SYSTEM. PROVIDE BLOCKING AS REQUIRED PER MANUFACTURER. REQUIREMENTS
- COLOR: MATCH TO ALUM. STOREFRONY FRAMING COLOR
- •• SEE PLUMBING DRAWINGS FOR RD CONNECTIONS.

(I) 4" LIMSTONE BULLNOSED WATERMARK
- COLOR: BEIGE / SAND

(J) CONCRETE FOOTING & FOUNDATION WALL - SEE STRUC. DWGS. PROVIDE AT EXTERIOR SIDE OF PERIMETER WALLS WITH SPRAY ON WATERPROOFING, R14.4 / 2" RIGID INSUL. (EXPANDED POLYSTYRENE) INSTALL PER MANUF. RECOMMENDATIONS

(K) PREFINISHED ALUMINUM STORE FRONT SYSTEM, INSTALL PER MANUFACTURERS WRITTEN GUIDELINES.
- PROVIDE WITH PREFINISHED ALUMINUM SLIP HEAD TO MATCH ALUMINUM STOREFRONT SYSTEM. (TYP.)
- PROVIDE PREFINISHED EXTRUDED ALUMINUM - THERMALLY BROKEN SILL FLASHING WITH END DAMS, ON ON SHIM ON PREFINISHED ALUMINUM SILL FLASHING WITH END DAMS WITH HEMMED EDGE, INSTALLED WITH A POSITIVE SLOPE AWAY FROM THE INTERIOR AND SET IN SEALANT AND INSTALLED PER MANUFACTURER'S WRITTEN RECOMMENDATIONS, MATCH TO ALUMINUM STORE FRONT SYSTEM. (TYP.)
- PROVIDE SHIM, SEALANT & BACKER ROD, PER MANUFACTURER'S WRITTEN RECOMMENDATIONS.
- REFER TO LISTED DETAILS FOR COMPOSITE ASSEMBLIES / ATTACHMENTS.
- PROVIDE LAMINATED GLAZING AS REQUIRED. (1)
- COLOR: ANOD. DARK BRONZE FRAMES
- COLOR: LOW E - CLEAR GLAZING
- SEE ComCheck FOR PREFORMANCE REQUIREMENTS.

(L) PREFINISHED ALUMINUM STORE FRONT ENTRY SYSTEM.
- PROVIDE SHIM, SEALANT & BACKER ROD, PER MANUFACTURER'S WRITTEN RECOMMENDATIONS.
- PROVIDE DRIP EDGE AND FLASHING PER MANUFACTURER'S WRITTEN RECOMMENDATIONS.
- PROVIDE ADA COMPLIANT THRESHOLD & HARDWARE.
- PROVIDE LAMINATED GLAZING AS REQUIRED. (1)
- MATCH COLOR AND GLAZING TO STOREFRONT SYSTEM.
- SEE ComCheck FOR PREFORMANCE REQUIREMENTS.

(M) E.I.F.S. RECESSED MEDILLION
- COLOR: MATCH TO E.I.F.S. (FIELD)
- TEXTURE: MEDIUM
- SIZE: 9" x 9"
- DEPTH: ¾"

(N) E.I.F.S. RAISED BAND
- COLOR: MATCH TO E.I.F.S. (FIELD)
- TEXTURE: MEDIUM
- SIZE: 24" TALL
- DEPTH: ¾"

(O) AZTEK TRIM BOARD / BUILT-UP MOLDING
- COLOR: PAINT TO MATCH TO E.I.F.S. (FIELD)
- TEXTURE: SMOOTH
- SIZE: 5-½" LAID OVER (REVEAL = 5")
- SIZE: 15-¼" LAID OVER (REVEAL = 9")
- SIZE 9-¼" (REVEAL = 8")
- THICKNESS: 5/8"

(P) CLAY FACE BRICK (DARK TONE) WITH MANUF. RECOMMENDED SEAL
- MANUF: BELDEN BRICK CO.
- SIZE: MODULAR (3-⅝" x 2-¼" x 7-⅝")
- TEXTURE: BARK
- COLOR: CHOCOLATE BROWN
- COURSE: HEADER
- MORTAR: MATCH TO MASONRY

(Q) CLAY FACE BRICK (LIGHT TONE) WITH MANUF. RECOMMENDED SEAL
- MANUF: BELDEN BRICK CO.
- SIZE: MODULAR (3-⅝" x 2-¼" x 7-⅝")
- TEXTURE: VELOUR
- COLOR: TUMBLEWEED
- COURSE: RUNNING BOND
- MORTAR: MATCH TO MASONRY

(R) CLAY FACE BRICK (DARK TONE) WITH MANUF. RECOMMENDED SEAL
- MANUF: BELDEN BRICK CO.
- SIZE: MODULAR (3-⅝" x 2-¼" x 7-⅝")
- TEXTURE: BARK
- COLOR: CHOCOLATE BROWN
- COURSE: SOLIDER
- MORTAR: MATCH TO MASONRY

(S) EXTERIOR WALL MOUNTED ROOF ACCESS LADDER
- MANUF: SIM TO OKEEFFES INC. - CAGED WALL LADDER #502
- COLOR: BLACK - POWDER COAT

(T) NOT USED

(U) TRASH ENCLOSURE SYSTEM (HURRICANE FENCE / STEEL WIRE MESH)
- MANUF: N/A
- SIZE: 7'-0" TALL
- COLOR: BLACK
- •• PROVIDE 12'-0" CLEAR SLIDING GATE SUPPORTED BY ROLLERS MOUNTED TO CONCRETE FILLED STEEL BOLLARDS. PROVIDE LOCKABLE (IN-SWING) FENCE DOOR. PROVIDE PRIVACY SLATES (BLACK)
- •• FINAL DESIGN BY FENCE SUPPLIER / CONTRACTOR.

(V) FABRIC AWNING WITH ALUM. FRAME
- COLOR: BLACK

(W) INSULATED EXTERIOR STEEL DOOR. PROVIDE LATCH GUARD & ALL NESS. WEATHER-PROOFING SEALS, DRIPS AND/OR SWEEPS.
- COLOR: PAINT TO MATCH TO ALUM. STOREFRONY FRAMING COLOR

(X) BUILDING PROFILE (BEYOND)

(Y) NOT USED

(Z) PREFINISHED ALUMINUM STORE FRONT DRIVE-THRU WINDOW SYSTEM.
- PROVIDE SHIM, SEALANT & BACKER ROD, PER MANUFACTURER'S WRITTEN RECOMMENDATIONS.
- PROVIDE DRIP EDGE AND FLASHING PER MANUFACTURER'S WRITTEN RECOMMENDATIONS.
- PROVIDE ADA COMPLIANT THRESHOLD & HARDWARE.
- PROVIDE LAMINATED GLAZING AS REQUIRED. (1)
- MATCH COLOR AND GLAZING TO STOREFRONT SYSTEM.
- SEE ComCheck FOR PREFORMANCE REQUIREMENTS.

(AA) ROOF TOP UNIT - PROFILE (BEYOND)

(BB) 5" LIMSTONE PILASTER CAP
- COLOR: BEIGE / SAND
- PROVIDE TOP WITH SLOPE AWAY FROM BLDG.
- PROVIDE DRIP CUT

(CC) ALUM. VERTICAL WALL TRELLIS ON STAINLESS STEEL HOLD-OFFS (12' H X 6' W) TOTAL NUMBER AND LOCATION T.B.D. WHEN FINAL METER LOCATIONS DETERMINED.

(DD) 1. WALL PACK - BUILDING LIGHTING - SEE ELECTRICAL DWGS.
2. EMERGENCY LIGHT FIXTURE AT EXIT DOOR - SEE ELECTRICAL DWGS.

EXTERIOR MATERIAL LEGEND 2

SCALE: 1/8" = 1'-0"

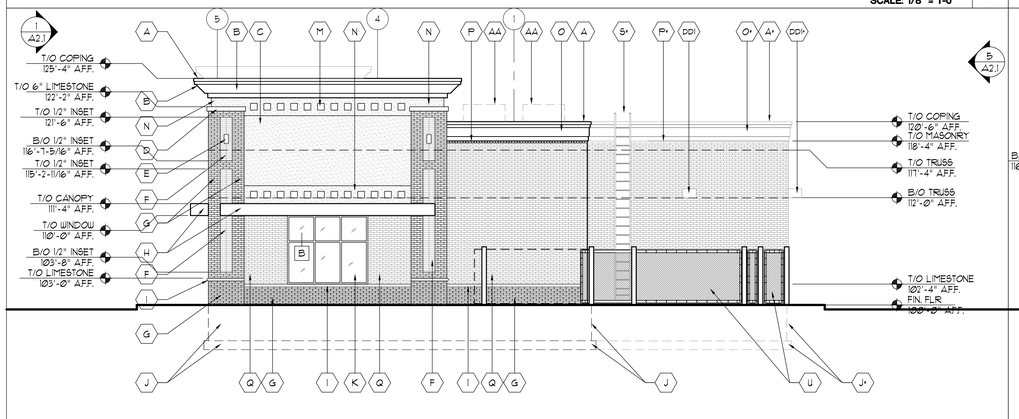

NORTH (SIDE) ELEVATION 3

SCALE: 1/8" = 1'-0"

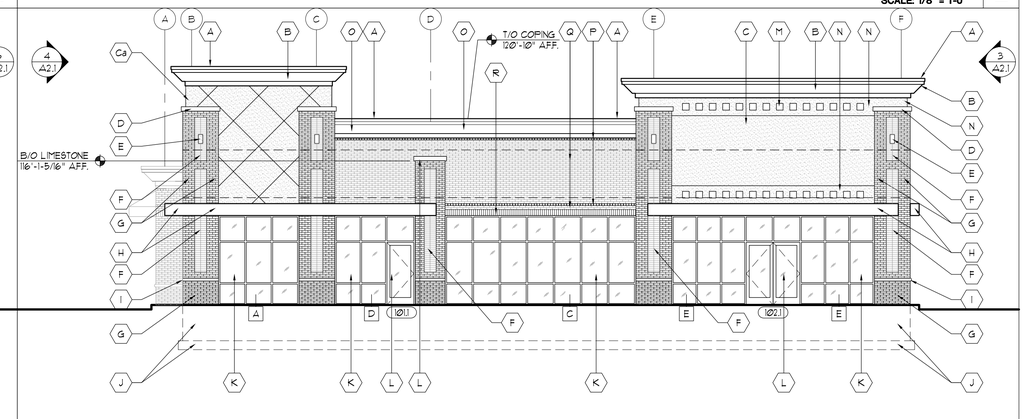

EAST (FRONT) ELEVATION 1

SCALE: 1/8" = 1'-0"

DO NOT SCALE THIS SHEET

FULL SIZE PRINT = 24" x 36" SHEET

COPYRIGHT PERSPECTIVE DESIGN, INC. 2012 ALL RIGHTS RESERVED - THIS DRAWING IS NOT TO BE REPRODUCED, CHANGED, COPIED, OR ASSIGNED TO ANY THIRD PARTY IN ANY FORM OR MANNER, WITHOUT FIRST OBTAINING THE EXPRESSED WRITTEN PERMISSION OF PERSPECTIVE DESIGN, INC. THE CLIENT AGREES TO INDEMNIFY AND HOLD THE ARCHITECT HARMLESS FROM ANY DAMAGES, LIABILITY, OR COST, INCLUDING ATTORNEY'S FEES AND COSTS OF DEFENSE ARISING FROM ANY CHANGES OR ALTERATIONS MADE BY ANYONE OTHER THAN THE ARCHITECT, OR FROM ANY REUSE OF THE DRAWINGS OR DATA WITHOUT THE PRIOR WRITTEN CONSENT OF THE ARCHITECT.

REV. #	REV. DATE	DESCRIPTION	REV. BY:
-	02/03/12	TENANT APPROVAL SET	WHC

Project:

Shoppes at Southgate
3355 27TH STREET
MILWAUKEE, WI

PERSPECTIVE DESIGN, INC.
11320 W. North Avenue
Wauwatosa, WI 53226
Tel (414) 302-1780 Fax (414) 302-1781

Drawing Title:
BUILDING ELEVATIONS

THIS BOX IS ½" x ½"

Date: 02/03/12
Scale: A.N.
Drawn: WHC
Job: 10-006
Sheet: A2.1

NOT FOR CONSTRUCTION

PLOT DATE: 2/6/2012

FILE NAME: P:_PROJECTS\KVG-MIDLAND 27TH RETAIL\A201_12-006.DWG

SURVEYOR'S CERTIFICATE

I, Ryan Wilgreen, Registered Land Surveyor, hereby certify that on this date I have completed a survey for Southgate Marketplace Outlot, LLC of a parcel of land described below.

That I have marked the corners or boundaries of said parcel on the ground by setting iron stakes as shown on the map and that the following is the correct description as surveyed and staked out:

Lot 2 of CSM No. _____, recorded in the Milwaukee County Register of Deeds Office on _____, as Document No. _____, being part of Parcel 3 of CSM No. 6745, being a part of the Northeast 1/4 and the Southeast 1/4 of the Northeast 1/4 of Section 13, Town 6 North, Range 21 East in the City of Milwaukee, Milwaukee County, Wisconsin.

That such survey is a correct representation of all the exterior boundaries of the land surveyed and the principal buildings thereon.

This survey is correct to the best of my knowledge and belief.

This survey is made for the exclusive use of the present owners and those who purchase, mortgage or guarantee title thereto within one year from the date hereof.

Ryan Wilgreen, R.L.S. No. S-2647

Excel Engineering, Inc.
Fond du Lac, Wisconsin 54935

Project Number: 1200960

WISCONSIN RYAN J. WILGREEN S-2647 FOND DU LAC WI LAND SURVEYOR 1/27/12

This plat of survey was required by the City of Milwaukee as part of the site plan submittal process. The CSM creating the subject property has not been recorded and an unrecorded copy of said CSM was used to define the boundaries of the subject property.

PROPOSED ASPHALT PARKING AREA

TOTAL AREA
0.491 ACRES
(21,388 sq. ft.)

LEGEND:

- 000.00 EXISTING SPOT ELEVATIONS
- 000.00 PROPOSED SPOT ELEVATIONS
- WATER VALVE IN BOX
- WATER VALVE IN MANHOLE
- EXISTING SQUARE CATCH BASIN
- EXISTING ROUND CATCH BASIN
- EXISTING CURB INLET
- PROPOSED ROUND INLET
- PROPOSED CURB INLET
- STREET LIGHT
- EXISTING LIGHT POLE
- ELECTRIC MANHOLE
- EXISTING SIGN
- HANDICAP PARKING STALL
- DECIDUOUS TREE
- 1" IRON PIPE FOUND
- MAG NAIL FOUND
- CHISELED 'X' FOUND
- MONUMENT FOUND
- EXISTING STORM SEWER AND MANHOLE
- EXISTING SANITARY SEWER AND MANHOLE
- EXISTING WATER LINE AND HYDRANT
- EXISTING UNDERGROUND ELECTRIC CABLE
- PROPOSED STORM SEWER AND MANHOLE
- PROPOSED SANITARY SEWER AND MANHOLE
- PROPOSED WATER LINE AND HYDRANT
- EXISTING CURB AND GUTTER
- PROPOSED CURB AND GUTTER
- EXISTING IRON FENCE
- PROPERTY LINE
- EXISTING GROUND CONTOUR
- PROPOSED GROUND CONTOUR

NOTE:
AN UPDATED TITLE SEARCH HAS NOT BEEN PROVIDED TO EXCEL ENGINEERING, INC. FOR THE PREPARATION OF THIS SURVEY.

BENCHMARK
(DATUM – NGVD 1929)

CUT "X" ON SOUTH SIDE OF LIGHT POLE BASE LOCATED APPROXIMATELY 100' WEST OF S. 27th STREET AND W. HOLT STREET INTERSECTION.

ELEVATION=659.44

NORTH

1"= 20' SCALE — 20' 0 20' 40' FEET

NOTE:
EXISTING UTILITIES SHOWN ARE INDICATED IN ACCORDANCE WITH AVAILABLE RECORDS AND FIELD MEASUREMENTS. THE CONTRACTOR SHALL BE RESPONSIBLE FOR OBTAINING EXACT LOCATIONS AND ELEVATIONS OF ALL UTILITIES, INCLUDING SEWER AND WATER FROM THE OWNERS OF THE RESPECTIVE UTILITIES. ALL UTILITY OWNERS SHALL BE NOTIFIED BY THE CONTRACTOR 72 HOURS PRIOR TO EXCAVATION.

NOTE:
THIS SURVEY MAY NOT REFLECT ALL UTILITIES, OR IMPROVEMENTS, IF SUCH ITEMS ARE HIDDEN BY LANDSCAPING, OR ARE COVERED BY SUCH ITEMS AS DUMPSTERS OR TRAILERS, OR WHEN THE SITE WAS COVERED WITH SNOW. THERE WAS APPROXIMATELY 2" OF SNOW COVER AFFECTING FIELD PROCEDURES AT THE TIME OF SURVEY.

BASED UPON THE REVIEW OF THE FEDERAL EMERGENCY MANAGEMENT AGENCY FLOOD INSURANCE RATE MAP NO. 55079C0152E WITH AN EFFECTIVE OF SEPTEMBER 26, 2008 THE SUBJECT PROPERTY FALL WITHIN ZONE X (AREAS DETERMNED TO BE OUTSIDE THE 0.2% ANNUAL CHANCE FLOODPLAIN)

PLAT OF SURVEY FOR:
SOUTHGATE MARKETPLACE OUTLOT, LLC
OF
3355 S. 27th STREET

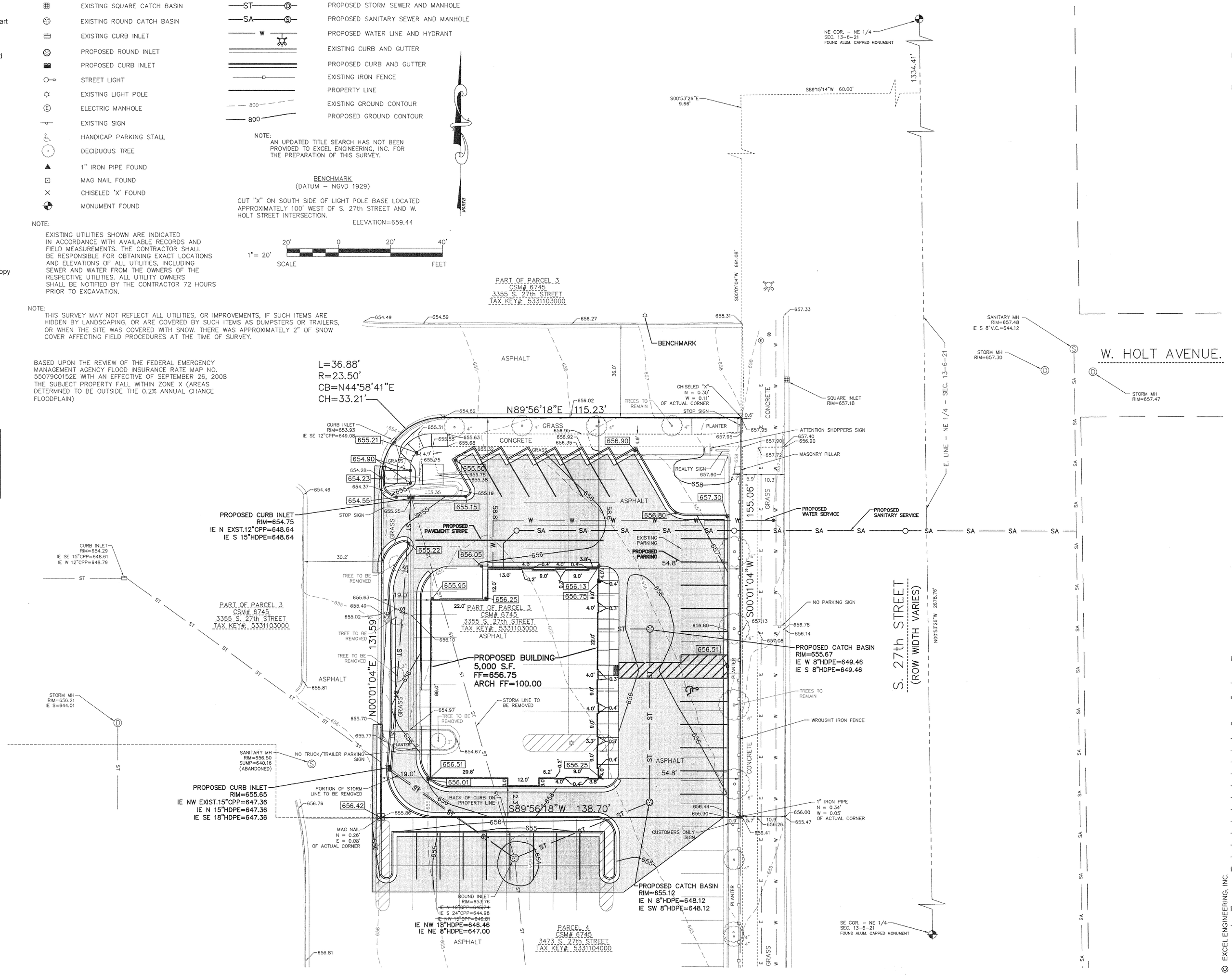

EXCEL ENGINEERING inc.
100 CAMELOT DRIVE
FOND DU LAC, WI 54935
PHONE: (920) 926-9800
FAX: (920) 926-9801

Always a Better Plan

OWNER:
SOUTHGATE MARKETPLACE OUTLOT, LLC.
10345 N. PORT WASHINGTON ROAD
SUITE 175
MEQUON, WI 53092

PROJECT:
3355 RETAIL
3355 S. 27th STREET
MILWAUKEE, WI 53215

SHEET ISSUE:
01-27-2012
SEE TITLE SHEET TO CONFIRM THAT THIS SHEET HAS BEEN ISSUED FOR CONSTRUCTION

REVISIONS:

JOB NUMBER:
1200960

SHEET
PS

2011 © EXCEL ENGINEERING, INC.

AMERICAN SIGN FACTORY
SURE LIGHT SIGN COMPANY

Mary Kowalski
Account Executive

4811 W. Woolworth Ave.
Milwaukee, WI 53218

office: 414.353.3666 ext. 13
cell: 414.243.6943
fax: 414.353.6828
maryk@american-sign.com

LOCATION 3355 S. 27TH STREET
MILWAUKEE WI.

DOUBLE FACE INT. ILLUMINATED SIGN STANDARD FLUORSCENTS/UL
ALUM. CABINET WITH [2] SEPERATE LEXAN FACES
GRAPHICS AS SHOWN AT THIS TIME
ALUM. CAP ON TOP
ALUM LETTERS ADDRESS/NAME ON BRICK BASE

otal: 0 MILES
Segment: 0 MILES
W EUCLID AV
W OHIO AV
W SUNBURY CT
W HOLT AV
W VERONA CT
W MORGAN AV
W WARNIMONT AV
W RUSKIN ST
W PAINE ST
W POE ST
W RUSKIN CT
S 30TH ST
S 31ST ST
S 29TH ST
S 27TH ST
S 26TH ST
S 25TH ST
S 24TH ST
S 23RD ST
S 22ND ST
S 33RD ST
S 32ND ST
S POINT TR
PROJECT LOCATION

To see all the details that are visible on the screen, use the "Print" link next to the map.
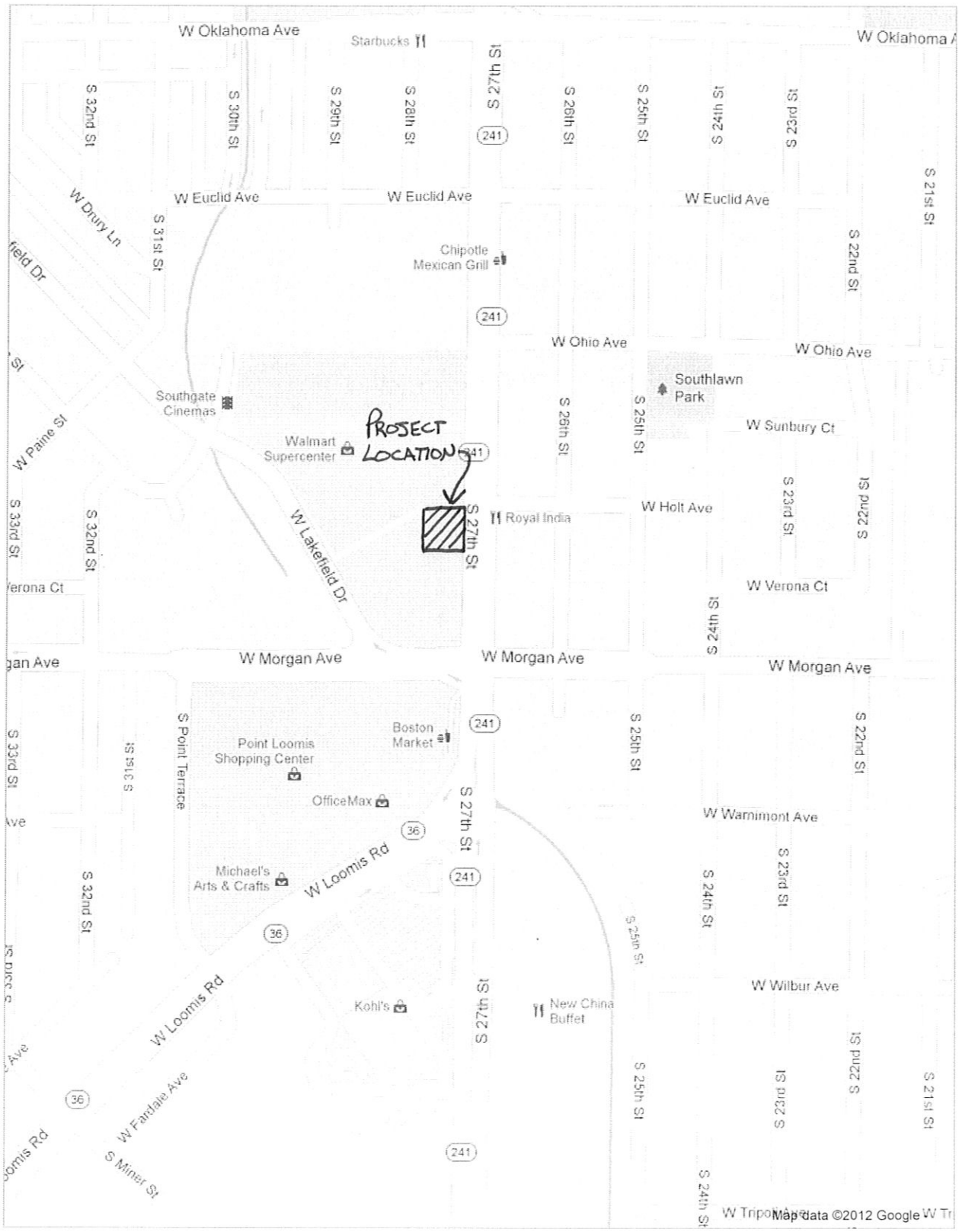
Google