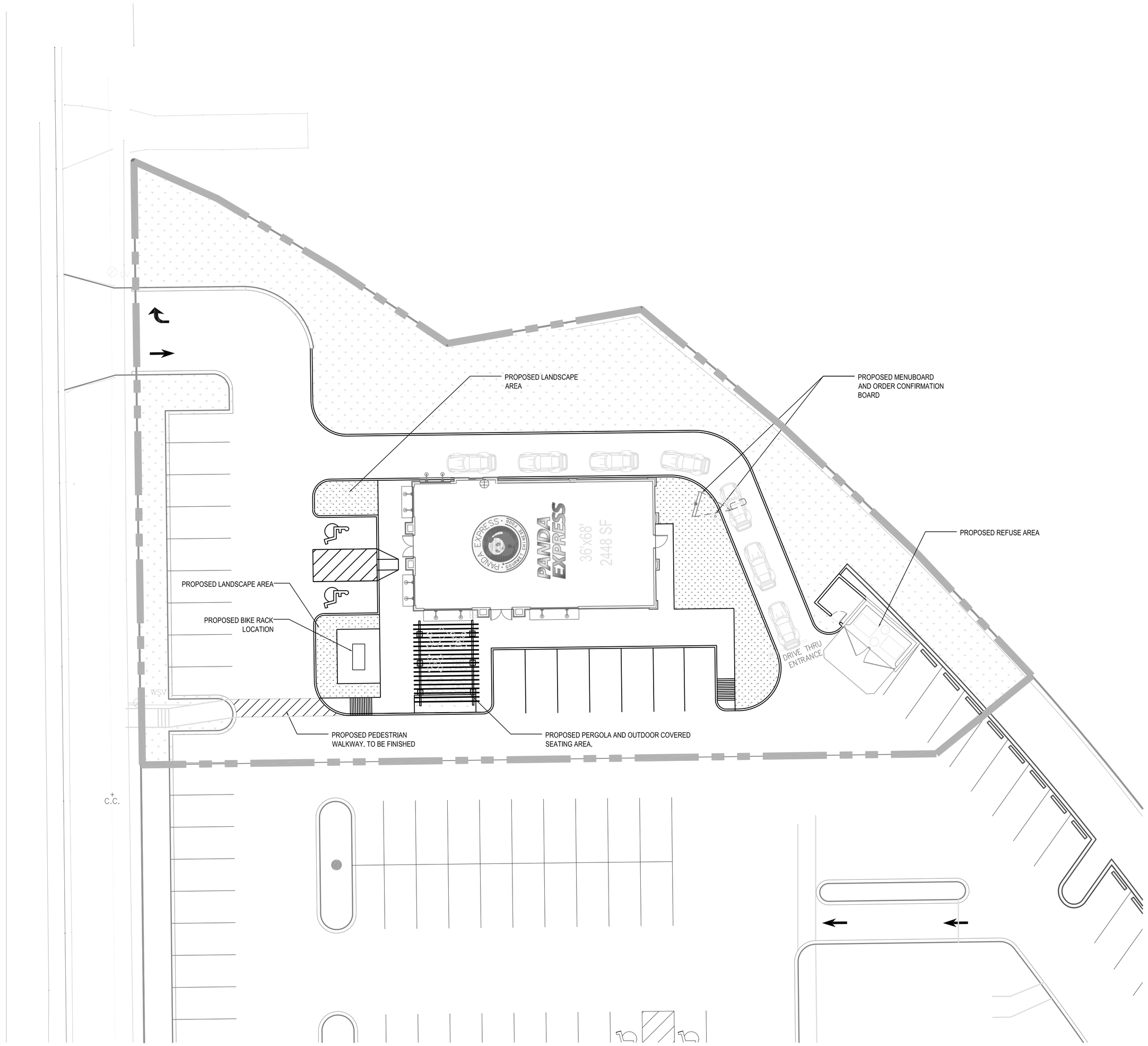

SITE PLAN 1

Scale:1/16"=1'-0" A-0.1

PANDA RESTAURANT GROUP INC.
1683 Walnut Grove Ave.
Rosemead, California
91770
Telephone: 626.799.9898
Facsimile: 626.372.8288

All ideas, designs, arrangement and plans indicated or represented by this drawing are the property of Panda Express Inc. and were created for use on this specific project. None of these ideas, designs, arrangements or plans may be used by or disclosed to any person, firm, or corporation without the written permission of Panda Express Inc.

REVISIONS:

ISSUE DATE:

DRAWN BY: AB

PANDA PROJECT #: S8-12-D3253

ARCH PROJECT #: 12035

HSB
Hengst Streff Bajko
Architect + Engineers
2777 E. CAMELBACK RD.
PHOENIX, AZ 85016
Tel: (602) 635-6409
Fax:(602) 314-7550

STAMP:

PANDA EXPRESS

27TH AND LOOMIS ROAD
MILWAUKEE, WI

A-0.1

SITE PLAN
ARCHITECTURAL

PROTOTYPE# S8-2448-11R2 07-08-11

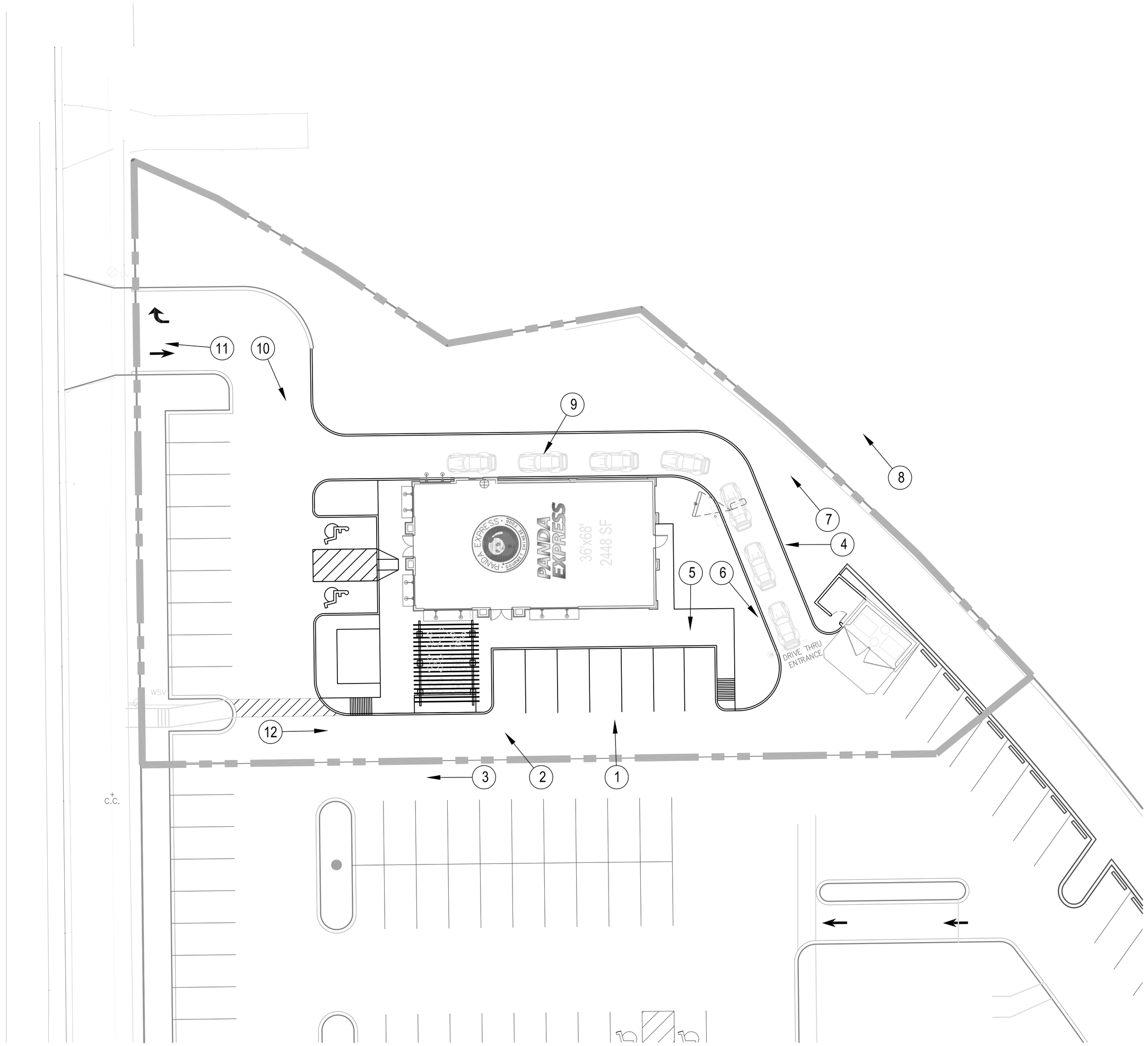

SITE PLAN 1

Scale:1/16"=1'-0" A-0.1

PANDA RESTAURANT GROUP INC.
1683 Walnut Grove Ave.
Rosemead, California
91770
Telephone: 626.799.9898
Facsimile: 626.372.8288

All ideas, designs, arrangement and plans indicated or represented by this drawing are the property of Panda Express Inc. and were created for use on this specific project. None of these ideas, designs, arrangements or plans may be used by or disclosed to any person, firm, or corporation without the written permission of Panda Express Inc.

REVISIONS:

ISSUE DATE:

DRAWN BY: AB

PANDA PROJECT #: S8-12-D3253

ARCH PROJECT #: 12035

HSB
Hengst Streff Bajko
Architect + Engineers
2777 E. CAMELBACK RD.
PHOENIX, AZ 85016
Tel: (602) 635-6409
Fax:(602) 314-7550

STAMP:

PANDA EXPRESS

27TH AND LOOMIS ROAD
MILWAUKEE, WI

A-0.1A

PHOTO PLAN

PROTOTYPE# S8-2448-11R2 07-08-11

EXTERIOR PAINT SCHEDULE

01-11-11

NO	MANUFACTURER	MFG#	COLOR	FINISH	NOTES
P110	SHERWIN-WILLIAMS	SW 6348	REYNARD	SATIN, LATEX	BUILDING BODY
P111	SHERWIN-WILLIAMS	SW 6982	AFRICAN VIOLET	SATIN, LATEX	TOWER
P113	SHERWIN-WILLIAMS	SW 6634	COPPER HARBOR	SATIN, LATEX	CORNICES
P131	SHERWIN-WILLIAMS	SW 6076	TURKISH COFFEE	SATIN, LATEX	BUILDING TRIM
P24	SHERWIN-WILLIAMS	SW 7639	ETHEREAL MOOD	SEMI-GLOSS, LATEX	"EYEBROW" OVER DOORS BY OWNER
BR-1	SIOUX CITY BRICK		RED DESERT		712-258-6571
ST-7	OWENS-CORNING	SW 6076	CSV-20007	CARAMEL COUNTRY LEDGESTONE	PILASTERS, TOWERS, WAINSCOT
ST-7S	OWENS-CORNING	SW 7639	CSV-444968	MOCHA	TRIM PIECE AT TOP OF WAINSCOT

CONTACT PERSON IS KATHY A. MANNON PHONE-1-866-315-5081 EMAIL-Kathy.Mannon@owencorning.com

NOTE: AT CONSTRUCTION COMPLETION, G.C. TO PROVIDE ONE QUART OF EACH TYPE INTERIOR AND EXTERIOR PAINT

WINDOW SCHEDULE

A20-WS08 01/15/1

SYM	WIDTH	HEIGHT	GLASS	FRAME	REMARKS
A	8'-6"	10'-0"	TEMPERED GLASS	CLEAR ANOD. ALUM.	DOUBLE GLAZED, LOW E
B	13'-6"	10'-0"	TEMPERED GLASS	CLEAR ANOD. ALUM.	DOUBLE GLAZED, LOW E
C	8'-6"	6'-6"	TEMPERED GLASS	CLEAR ANOD. ALUM.	DOUBLE GLAZED, LOW E
D	47.5"	59.5"	TEMPERED GLASS	CLEAR ANOD. ALUM.	QUIK-SERV, MODEL SST-4860 STEVE BERT, 800-388-8307

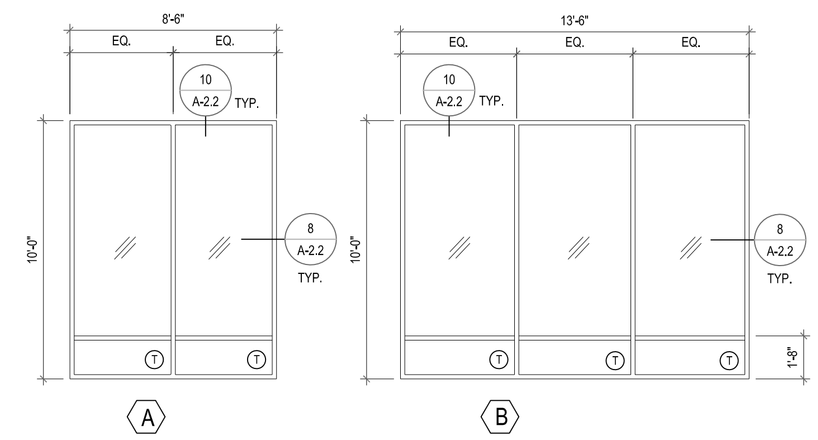

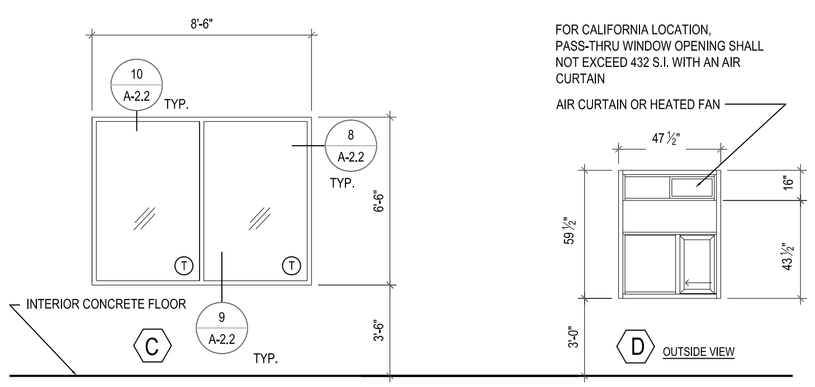

ALUMINUM STOREFRONT SYSTEM

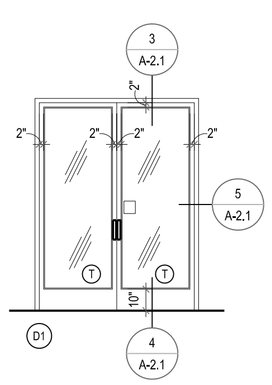

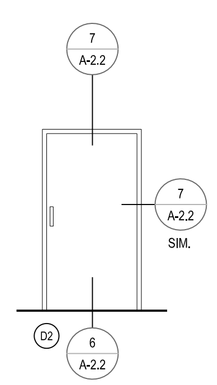

(T) TEMPERED GLASS (COMPLY W/2003-I.B.C. SECTION 2406)

1. "KAWNEER" ANODIZED CLEAR ALUMINUM WINDOW SYSTEM GLAZING TO BE DUAL GLAZ WITH 1/2" GAP, LOW-E.
2. DOORS: STYLE AND RAIL. GLAZED DOORS WITH EXTRUDED ALUM. TUBULAR FRAMES. DOOR TYPE: 1-3/4" THICKNESS, CLEAR ALUMINUM, FACTORY FINISH.
3. WINDOW DIMENSIONS ARE FOR BIDDING PURPOSES ONLY. G.C. TO VERIFY ACTUAL WINDOW DIMENSIONS PRIOR TO FABRICATION INSTALLATION.
4. MANUFACTURER: QUIK-SERV, MODEL SST-4860, R.O. 48' X 60"
5. GLAZING U FACTOR =0.29, SHGC = 0.40
6. WINDOW SYSTEM SHALL COMPLY WITH SECTION 1714.5 AND CHAPTER 24 OF 2003 I.B.C.

WINDOWS AND DOORS ELEVATIONS | 3

N.T.S. | A-2.0

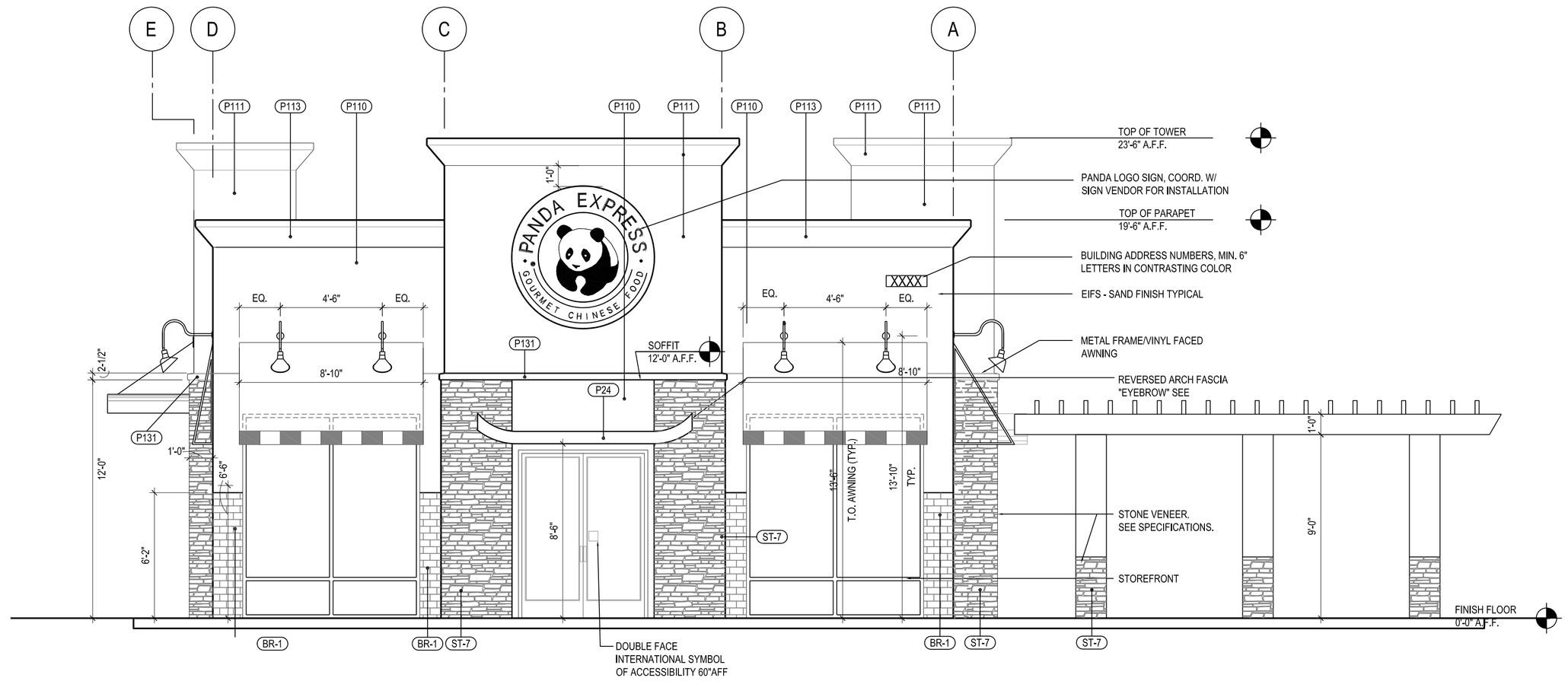

WEST ELEVATION | 1

Scale = 1/4"=1'-0" | A-2.0

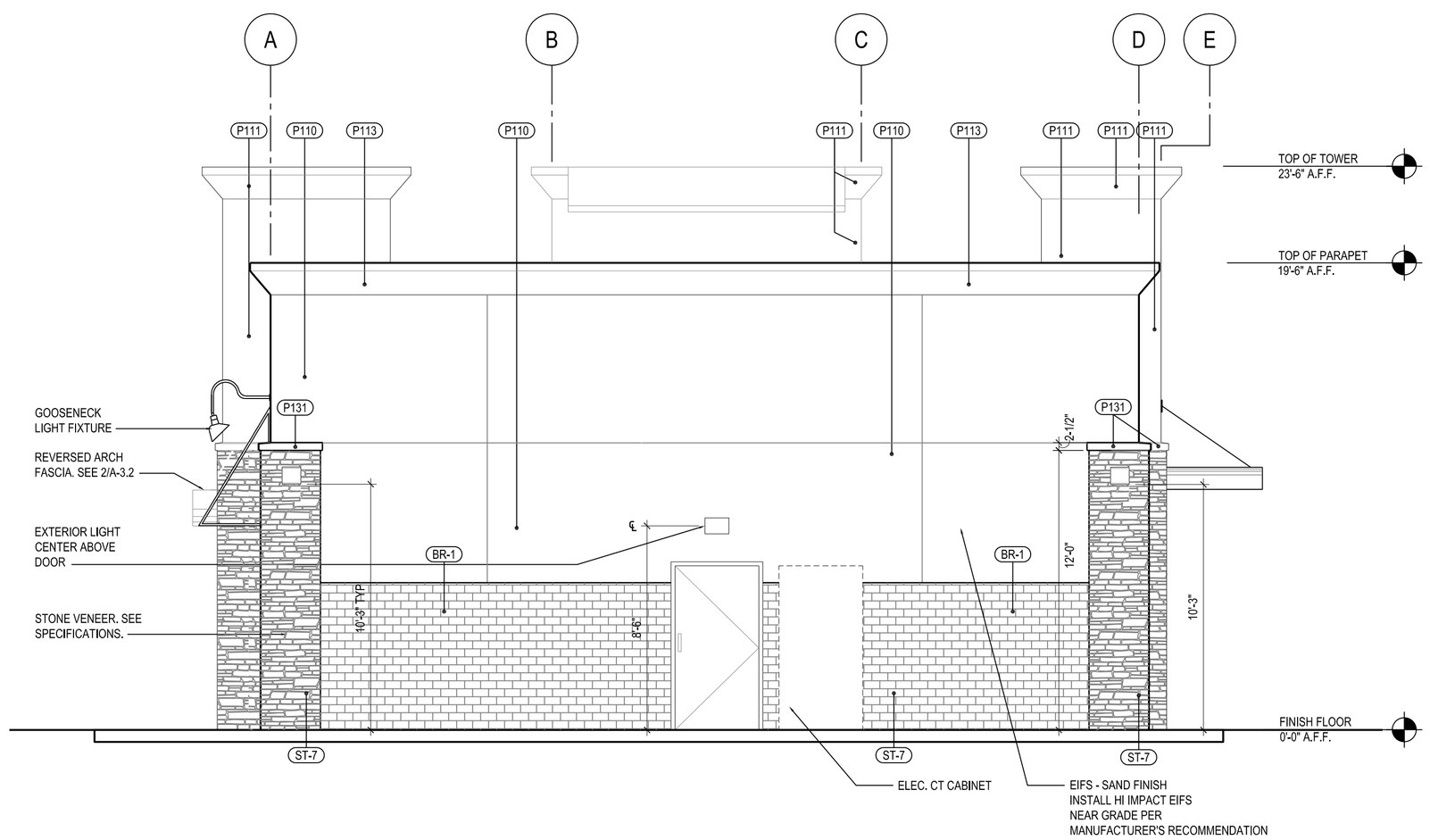

EAST ELEVATION | 2

Scale = 1/4"=1'-0" | A-2.0

PANDA RESTAURANT GROUP INC.
1683 Walnut Grove Ave.
Rosemead, California
91770
Telephone: 626.799.9898
Facsimile: 626.372.8288

All ideas, designs, arrangement and plans indicated or represented by this drawing are the property of Panda Express Inc. and were created for use on this specific project. None of these ideas, designs, arrangements or plans may be used by or disclosed to any person, firm, or corporation without the written permission of Panda Express Inc.

REVISIONS:

ISSUE DATE:

DRAWN BY: AB

PANDA PROJECT #: S8-12-D3253

ARCH PROJECT #: 12035

HSB
Hengst Streff Bajko
Architect + Engineers
2777 E. CAMELBACK RD.
PHOENIX, AZ 85016
Tel: (602) 635-6409
Fax:(602) 314-7550

STAMP:

PANDA EXPRESS

27TH AND LOOMIS ROAD
MILWAUKEE, WI

A-2.0

EXTERIOR ELEVATIONS

PROTOTYPE# S8-2448-11R2 07-08-11

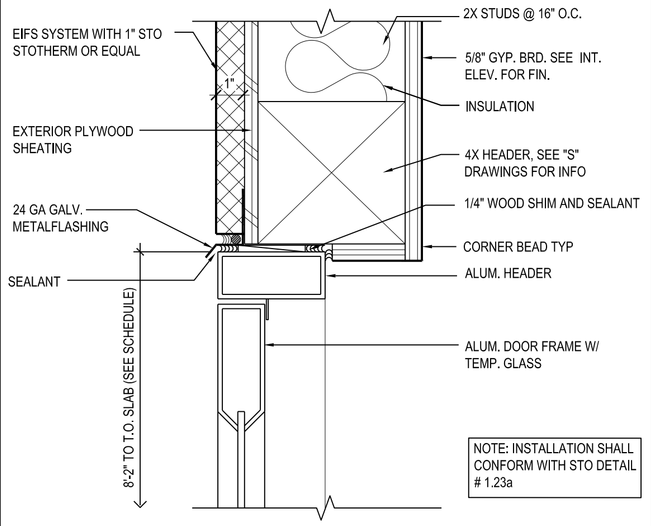

DOOR HEAD DETAIL 3
Scale:3"=1'-0" A-2.1

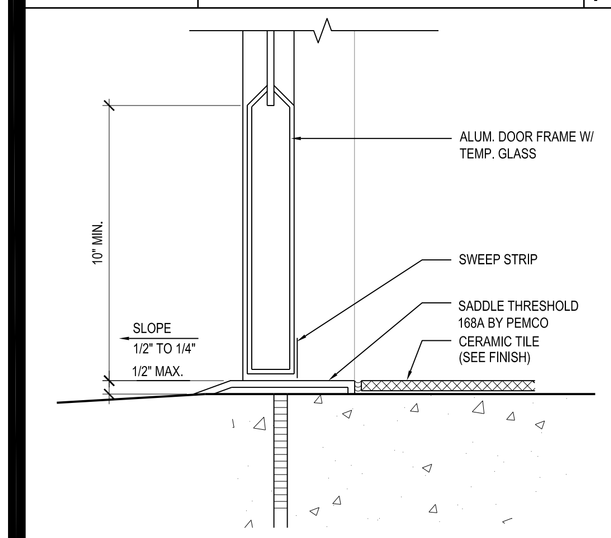

DOOR SILL DETAIL 4
Scale:3"=1'-0" A-2.1

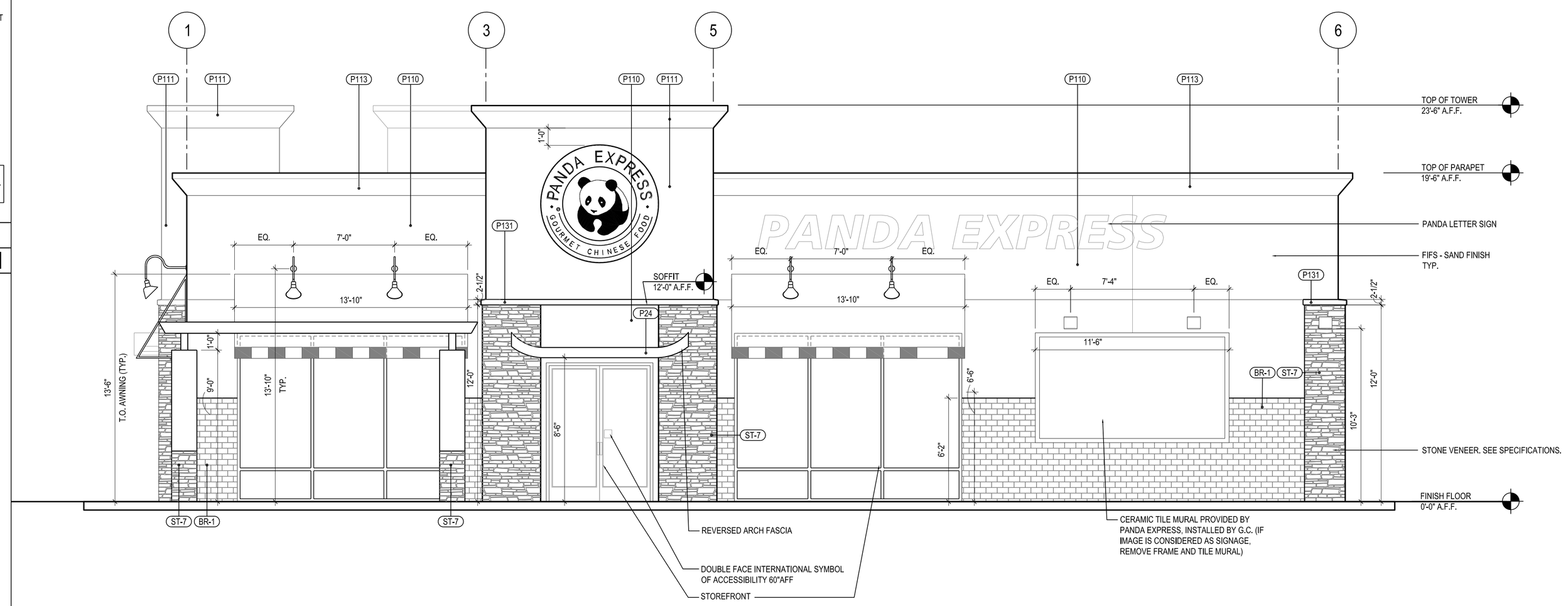

SOUTH ELEVATION 1
Scale = 1/4"=1'-0" A-2.1

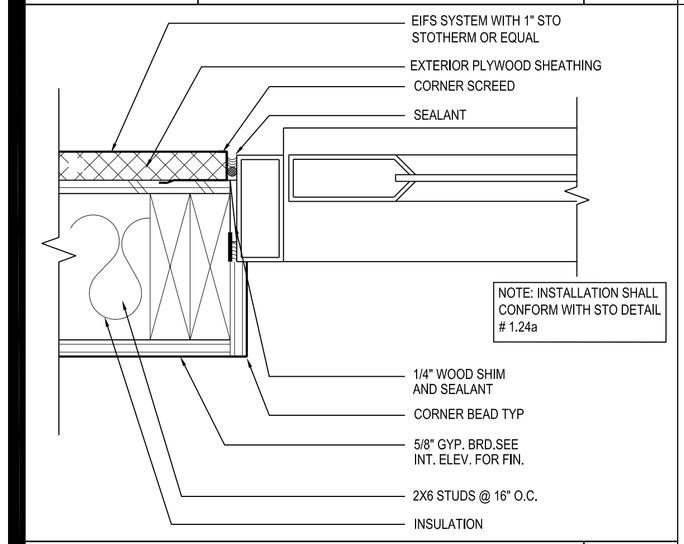

DOOR JAMB DETAIL 5
Scale:3"=1'-0" A-2.1

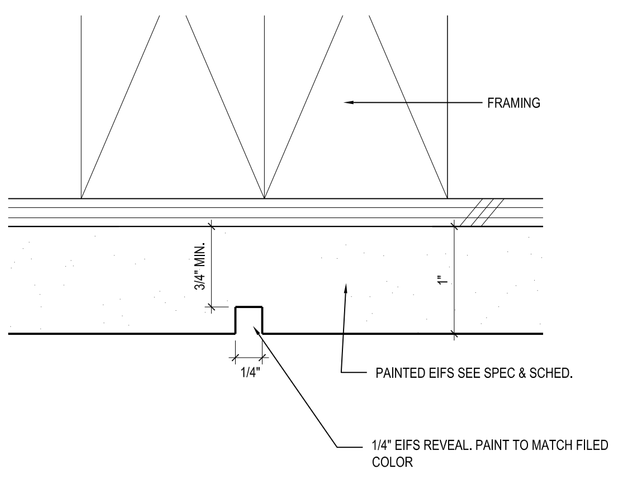

EIFS SCREED DETAIL 6
1"=1'-0" A-2.1

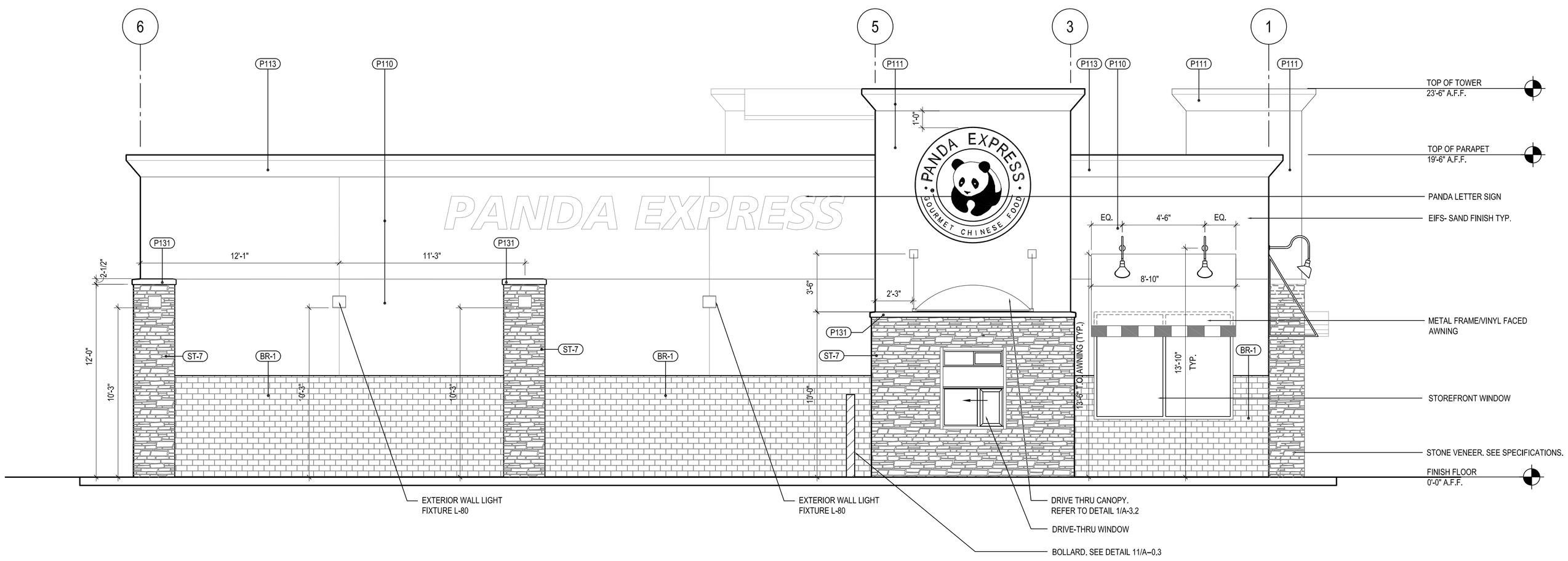

NORTH ELEVATION 2
Scale = 1/4"=1'-0" A-2.1

PANDA RESTAURANT GROUP INC.
1683 Walnut Grove Ave.
Rosemead, California
91770
Telephone: 626.799.9898
Facsimile: 626.372.8288

All ideas, designs, arrangement and plans indicated or represented by this drawing are the property of Panda Express Inc. and were created for use on this specific project. None of these ideas, designs, arrangements or plans may be used by or disclosed to any person, firm, or corporation without the written permission of Panda Express Inc.

REVISIONS:

ISSUE DATE:

DRAWN BY: AB

PANDA PROJECT #: S8-12-D3253
ARCH PROJECT #: 12035

HSB
Hengst Streff Bajko
Architect + Engineers
2777 E. CAMELBACK RD.
PHOENIX, AZ 85016
Tel: (602) 635-6409
Fax:(602) 314-7550

STAMP:

PANDA EXPRESS

27TH AND LOOMIS ROAD
MILWAUKEE, WI

A-2.1

EXTERIOR ELEVATIONS

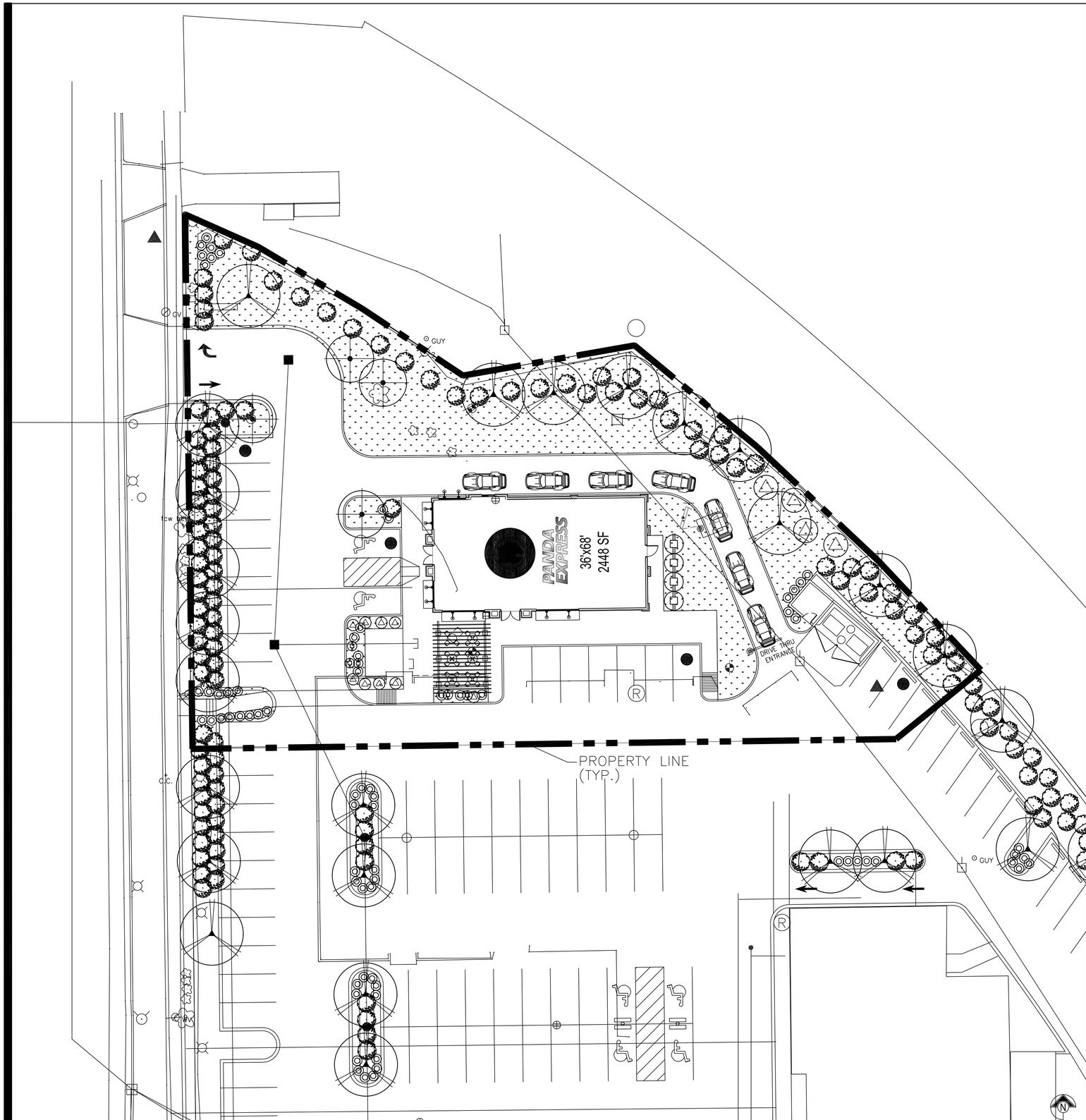

PLANTING SCHEDULE:

KEY	SCIENTIFIC NAME / COMMON NAME	QTY.	SIZE	REMARKS
	TREES			
	PROPOSED SHADE TREE	14	3" CAL.	SINGLE STEM
	PROPOSED EVERGREEN TREE	04	3" CAL.	SINGLE STEM
	SHRUBS			
	PROPOSED DECIDUOUS SHRUB	23	1GALLON	FULL & HEALTHY
	PROPOSED DECIDUOUS SHRUB	09	15" CONT.	FULL & HEALTHY
	PROPOSED EVERGREEN SHRUB	83	6' B&B	FULL & HEALTHY
	PROPOSED ORNAMENTAL GRASS	13	18" CONT.	FULL & HEALTHY
	GROUND COVER LOCALLY GROWN BLUEGRASS BLEND	9,629 SQ. FT	SOD	

NOTE:

- CONDITIONS: ALL TREES B & B AND ALL SHRUBS IN CONTAINERS
- SHADE TREES A MINIMUM OF 3" IN DIAMETER AS MEASURED 6" ABOVE THE ESTABLISHED GROUND LEVEL AND/ OR EVERGREEN TREES A MINIMUM OF 6'-0" IN HEIGHT
- PARKING LOT SHRUBS MUST NOT EXCEED 30" IN HEIGHT AND THE BRANCHES OF TREES SHALL START NO LESS THAN 6' ABOVE PAVEMENT TO ENSURE VISIBILITY.
- ALL LANDSCAPE MATERIALS SHALL BE GUARANTEED FOR TWO (2) YEARS.

LANDSCAPING NOTES:

1. ALL LANDSCAPE WORK SHALL BE DONE IN ACCORDANCE WITH INDUSTRY STANDARDS.
2. ALL AREAS CALLED OUT ON THE PLAN AS "SOD" SHALL BE INSTALLED AND FERTILIZED AS FOLLOWS:
   SOD – BERMUDA SOD, FERTILIZER – 16-20-6 RATIO, 4#/1,000 SQ. FT.
3. TREES WITH BROKEN LEADERS OR NO CENTRAL LEADER WILL NOT BE ACCEPTED.
4. A PRE-EMERGENT HERBICIDE SUCH AS TREFLAN (5%) (OR EQUAL) SHALL BE APPLIED PER LABEL DIRECTIONS. ALL PLANTING BEDS TO RECEIVE 2" ORGANIC MATTER (SUCH AS COTTON BUR MULCH, COMPOST, OR HUMUS) AND SHALL BE ROTOTILLED IN TO A DEPTH OF 10-12"
5. MULCH ALL PLANTING BEDS WITH MIN. 3" OF MULCH. MULCH ALL TREE SAUCER WELLS WITH MIN. 3" OF MULCH. MULCH MATERIAL TO BE SHREDDED CYPRESS MULCH OF UNIFORM CONSISTENCY.
6. BLACK COBRA LAWN EDGING SHALL BE USED TO SEPARATE ALL TURF AREAS FROM PLANTING BEDS. EDGING SHALL BE COMMERCIAL GRADE, OR APPROVED EQUAL.
7. GENERAL CONTRACTOR TO SUPPLY AND PLACE AT A DEPTH OF 4", ALL TOPSOIL ON SITE.
8. TOPSOIL HAULED ONTO SITE SHALL BE FERTILE, FRIABLE, NATURAL LOAM TOPSOIL, OF UNIFORM QUALITY CHARACTERISTIC OF REPRESENTATIVE LOCAL SOILS WHICH PRODUCE HEAVY GROWTH OF CROPS, GRASS, OR OTHER VEGETATION. IT SHALL BE FREE OF TRASH, OR OTHER MATTER TOXIC TO PLANT GROWTH.
9. TOPSOIL SHALL BE DELIVERED IN AN UNFROZEN AND NON-MUDDY CONDITION AND SHALL BE SUBJECT TO APPROVAL BY THE LANDSCAPE ARCHITECT.
10. PRIOR TO ANY EXCAVATION FOR LANDSCAPING PURPOSES THE LOCATION OF UNDERGROUND UTILITIES SHALL BE DETERMINED BY CALLING JULIE 811. CONTRACTOR SHALL BE RESPONSIBLE FOR ANY DAMAGE DONE TO EXISTING UTILITIES.
11. REPORT ANY DISCREPANCIES IN THE PLANTING PLAN TO THE LANDSCAPE ARCHITECT, PRIOR TO STARTING CONSTRUCTION.
12. THE LANDSCAPE CONTRACTOR SHALL COORDINATE WITH THE G.C. TO GAIN SITE ACCESS TO INSTALL THE PLANTS AND MAINTAIN GROUNDS, UNTIL FINAL ACCEPTANCE FROM OWNER. UPON FINAL ACCEPTANCE, THE ONE (1) YEAR GUARANTEE PERIOD WILL BEGIN.
13. THE LANDSCAPE CONTRACTOR SHALL COORDINATE WITH THE G.C. TO INSTALL THE PLANTS AND MAINTAIN GROUNDS, UNTIL FINAL ACCEPTANCE FROM OWNER.
14. THE LANDSCAPE CONTRACTOR SHALL SUBMIT BID WITH UNIT PRICES FOR ALL PLANTS, INCLUDING MULCH, INSTALLATION, TWO (2) YEAR GUARANTEE, BED PREPARATION, FERTILIZER, ETC.
15. THE LANDSCAPE CONTRACTOR IS RESPONSIBLE FOR ANY DAMAGE DONE TO THE EXTERIOR OF THE BUILDING OR ANY PART OF THE PARKING LOT WHEN INSTALLED OR MAINTAINING THE PLANTINGS BEFORE FINAL ACCEPTANCE.
16. GENERAL CONTRACTOR TO COORDINATE WITH APPROPRIATE LOCAL CITY OFFICIAL TO REMOVE / TRANSPLANT EXIST TREES.
17. FALL PLANTING SEASON SHALL BE SEPTEMBER 1 THRU OCTOBER 31. SPRING PLANTING SEASON SHALL BE APRIL 1 THRU JUNE 30. FOR GRASS SEEDING FALL SEASON SHALL BE SEPTEMBER 1 THRU MID OCTOBER. SPRING SEASON FOR SEEDING SHALL BE FROM MARCH 15 THRU MID MAY.
18. LANDSCAPE CONTRACTOR SHALL PROVIDE MAINTENANCE UNTIL FINAL PROJECT ACCEPTANCE INCLUDING LANDSCAPE MAINTENANCE AND WATERING.

SITE INFORMATION

SQUARE FOOTAGE TOTAL:	27,341 SQ. FT.
BUILDING:	2,448 SQ. FT. – 09%
IMPERVIOUS SURFACE TOTAL:	15,264 SQ. FT. – 55%
GREEN SPACE TOTAL:	9,629 SQ. FT. – 36%

LANDSCAPE PLAN 1
Scale: 1/16" = 1'-0" L-1.0

PLANTING SCHEDULE
Scale: NTS L-1.0

PANDA RESTAURANT GROUP INC.
1683 Walnut Grove Ave.
Rosemead, California
91770
Telephone: 626.799.9898
Facsimile: 626.372.8288

All ideas, designs, arrangement and plans indicated or represented by this drawing are the property of Panda Express Inc. and were created for use on this specific project. None of these ideas, designs, arrangements or plans may be used by or disclosed to any person, firm, or corporation without the written permission of Panda Express Inc.

REVISIONS:

ISSUE DATE:

DRAWN BY: AB

PANDA PROJECT #: S8-12-D3253
ARCH PROJECT #: 12035

HSB
Hengst Streff Bajko
Architect + Engineers
2777 E. CAMELBACK RD.
PHOENIX, AZ 85016
Tel: (602) 635-6409
Fax:(602) 314-7550

STAMP:

PANDA EXPRESS

27TH AND LOOMIS ROAD
MILWAUKEE, WI

L-1.0

LANDSCAPE PLAN

PROTOTYPE# S8-2448-11R2 07-08-11