Greenwich Park Apartments

Milwaukee, Wisconsin
Detailed Plan Development Submittal
Amendment 1 - December 1, 2010

mercy HOUSING
Live in Hope

KORB TREDO ARCHITECTS
790 N. Milwaukee Street, Suite 210
Milwaukee, Wisconsin 53202
p: 414.273.8230
f: 414.273.8231

Table of Contents

- Project Team
- Project Information
- Detailed Plan Project Description and Owner's Statement of Intent
- LEED Target Matrix
- Vicinity Maps
- Plat of Survey
- Site Utility Plan
- Site Grading Plan
- Site & Landscape Plan
- Building Plans
- Building Elevations
- Typical Construction Details
- Site Images
- Building Images

Project Team

Owner

Mercy Housing Lakefront
David Lyon - Regional Director of Real Estate Development
Mercy Housing Lakefront
120 S. LaSalle, Suite 1850
Chicago, Illinois 60603
Ph: 312.447.4560
Fax: 312.447.4750
Email: dlyon@mercyhousing.org

Architect

Jason Korb - Architect
790 N. Milwaukee Street, Suite 210
Milwaukee, WI 53202
Ph: 414.273.8230
Fax: 414.273.8231
Email: jason@korbtredo.com

Civil Engineer / Surveyor

Edwards Engineering
Marc Hilliard - Engineer
7665 North Port Washington Road
Milwaukee, WI 53217-3175
Ph: 414.228.8998

Project Information - New Development

• Gross land area	25,594 square feet
• Land covered by principal building	26,332 square feet (100%)*
• Land devoted to parking, drives, and parking structures	19,422 square feet (75.8%)
• Minimum amount of land devoted to landscape	1,002 square feet (3.9%)
• Maximum dwelling unit density	54 units
• Total SF devoted to non-residential uses	24,949 square feet
• Proposed number of buildings	1 building
• Maximum number of dwelling units per building	54 living units within the 1 proposed building
• Bedrooms per unit	Varies: studios, 1, 2, and 3 bedroom units
• Parking spaces provided	48 public spaces, 61 resident spaces, 109 total
• Metered Street parking provided	13 metered spaces
• Parking ratio per unit	1:1

*Principal building extends beyond existing property line at north edge. Application for vacation is in progress.

Project Information - US Bank Parcel

• Gross land area	18,793 square feet
• Land covered by principal building	7,221 square feet (38.4%)
• Land devoted to parking, drives, and parking structures	11,167 square feet (59.4%)
• Minimum amount of land devoted to landscape	712 square feet (3.8%)
• Maximum dwelling unit density	0
• Total SF devoted to non-residential uses	18,793 square feet
• Proposed number of buildings	1 building (existing)
• Maximum number of dwelling units per building	0
• Bedrooms per unit	0
• Parking spaces provided	0

Project Description/Owner's Statement of Intent

mercy HOUSING
Live in Hope

The Greenwich Park project will bring Mercy Housing Lakefront's (MHL) workforce housing model to Milwaukee by creating 54 housing units in what is currently a City of Milwaukee and US Bank surface parking lot. There is a critical need for this type of housing in Milwaukee and in this neighborhood to support employers such as Columbia St. Mary's with affordable, walk-to-work housing for their employees.

Mercy Housing's past experience in providing successful supportive and workforce housing prompted an invitation from City and County officials to have Mercy build a demonstration project in Milwaukee. This demonstration project, The Johnston Residences, was completed in September on Milwaukee's near south side at 13th street and Windlake avenue, it will offer 91 units of permanent supportive housing. A phased move-in is underway and a total of 91 residents will call Johnston Residences home.

MHL elected to enter the Milwaukee market as it is home to Columbia - St. Mary's, an Ascension Health system hospital, and one of Mercy Housing's national Strategic Healthcare partners. The proposed project will benefit from this relationship and Columbia St. Mary's strength in the community. Mercy continues to benefit from strong support from the Milwaukee community at the City, County and Aldermanic levels as well as the private sector.

The site for this project was selected after a thorough review of available land and buildings in all parts of the city. Proximity to transportation, shopping, employment and parks as well as the terms and timing of acquisition were all factors in determining the appropriate site. The City has given MHL the Exclusion Right to Negotiate for the property. However, MHL will not take title to the property until tax credit funding allocations are secured and all due diligence is complete. The proposed schedule for the project is to begin as early as October of 2011 and to occupy the building October of 2012.

During construction, the existing US Bank Parking Lot and acquired City of Milwaukee parking lot will be taken off-line. To that end, Mercy Housing Lakefront will be working with Columbia St. Mary's prior to construction to modify and suppliment signage on their existing parking structure so that it clearly states the availability of free public parking after business hours.

It is also important to note that as part of this project, improvements will be made to the entry and exit conditions of the US Bank Drive Thru facility, however, the major infrastructure will remain unchanged and fully operational through construction. Future improvements to the US Bank buildings will follow the existing LB2 requirements.

MHL is not only a developer but a long-term owner and property manager. Our investment in Milwaukee is an investment in community and we plan to remain a part of the community for many years to come. The primary source of capital finding for this project will be LIHTC's administered by the Wisconsin Housing and Economic Development Authority (WHEDA). Applications for 2011 funding are due no later than February of 2011.

The Greenwich Park project would be the second of many projects that Mercy hopes to complete in Milwaukee in the coming years. It is our intention to build and/or preserve a portfolio of 300 to 500 units of affordable housing in the next 5 years. We hope to complete an array of affordable housing products and drawing on the strength of our national organization. Mercy Housing Inc. has developed more than 19,000 affordable homes, both rental and single family, serving more than 58,999 residents on a given day.

David Lyon
Regional director, Housing Development
Mercy Housing Lakefront

Mercy Housing Lakefront - Mercy Services Corporation - Mercy Portfolio Services
120 South LaSalle Street, Suite 1850 - Chicago, Illinois 60603 - 312.447.4500 - Fax: 312.447.4750
www.mercyhousing.org

LEED Target Matrix

LEED 2009 for New Construction and Major Renovation Project Scorecard

Project Name: Mercy Housing at Greenwich
Project Address: 2353 N. Farwell Avenue, Milwaukee, Wisconsin

Yes	?	No			
21	2	3	SUSTAINABLE SITES		26 Points
Y			Prereq 1	Construction Activity Pollution Prevention	Required
1			Credit 1	Site Selection	1
5			Credit 2	Development Density and Community Connectivity	5
		1	Credit 3	Brownfield Redevelopment	1
6			Credit 4.1	Alternative Transportation - Public Transportation Access	6
1			Credit 4.2	Alternative Transportation - Bicycle Storage and Changing Rooms	1
3			Credit 4.3	Alternative Transportation - Low-Emitting and Fuel-Efficient Vehicles	3
	2		Credit 4.4	Alternative Transportation - Parking Capacity	2
		1	Credit 5.1	Site Development - Protect or Restore Habitat	1
		1	Credit 5.2	Site Development - Maximize Open Space	1
1			Credit 6.1	Stormwater Design - Quantity Control	1
1			Credit 6.2	Stormwater Design - Quality Control	1
1			Credit 7.1	Heat Island Effect - Nonroof	1
1			Credit 7.2	Heat Island Effect - Roof	1
1			Credit 8	Light Pollution Reduction	1
Yes	?	No			
6	2	2	WATER EFFICIENCY		10 Points
					4
Y			Prereq 1	Water Use Reduction	Required
2	2		Credit 1	Water Efficient Landscaping	2 to 4
				Reduce by 50%	2
				No Potable Water Use or Irrigation	4
		2	Credit 2	Innovative Wastewater Technologies	2
4			Credit 3	Water Use Reduction	2 to 4
				Reduce by 30%	2
				Reduce by 35%	3
				Reduce by 40%	4
13	15	7	ENERGY & ATMOSPHERE		35 Points
Y			Prereq 1	Fundamental Commissioning of Building Energy Systems	Required
Y			Prereq 2	Minimum Energy Performance	Required
Y			Prereq 3	Fundamental Refrigerant Management	Required
9	10		Credit 1	Optimize Energy Performance	1 to 19
				Improve by 12% for New Buildings or 8% for Existing Building Renovations	1
				Improve by 14% for New Buildings or 10% for Existing Building Renovations	2
				Improve by 16% for New Buildings or 12% for Existing Building Renovations	3
				Improve by 18% for New Buildings or 14% for Existing Building Renovations	4
				Improve by 20% for New Buildings or 16% for Existing Building Renovations	5
				Improve by 22% for New Buildings or 18% for Existing Building Renovations	6
				Improve by 24% for New Buildings or 20% for Existing Building Renovations	7
				Improve by 26% for New Buildings or 22% for Existing Building Renovations	8
				Improve by 28% for New Buildings or 24% for Existing Building Renovations	9
				Improve by 30% for New Buildings or 26% for Existing Building Renovations	10
				Improve by 32% for New Buildings or 28% for Existing Building Renovations	11
				Improve by 34% for New Buildings or 30% for Existing Building Renovations	12
				Improve by 36% for New Buildings or 32% for Existing Building Renovations	13
				Improve by 38% for New Buildings or 34% for Existing Building Renovations	14
				Improve by 40% for New Buildings or 36% for Existing Building Renovations	15
				Improve by 42% for New Buildings or 38% for Existing Building Renovations	16
				Improve by 44% for New Buildings or 40% for Existing Building Renovations	17
				Improve by 46% for New Buildings or 42% for Existing Building Renovations	18
				Improve by 48%+ for New Buildings or 44%+ for Existing Building Renovations	19
	3	4	Credit 2	On-Site Renewable Energy	1 to 7
				1% Renewable Energy	1
				3% Renewable Energy	2
				5% Renewable Energy	3
				7% Renewable Energy	4
				9% Renewable Energy	5
				11% Renewable Energy	6
				13% Renewable Energy	7
2			Credit 3	Enhanced Commissioning	2
2			Credit 4	Enhanced Refrigerant Management	2
		3	Credit 5	Measurement and Verification	3
	2		Credit 6	Green Power	2
Yes	?	No			
6	2	6	MATERIALS & RESOURCES		14 Points

LEED 2009 for New Construction and Major Renovation Project Scorecard

Project Name: Mercy Housing at Greenwich
Project Address: 2353 N. Farwell Avenue, Milwaukee, Wisconsin

Yes	?	No			
Y			Prereq 1	Storage and Collection of Recyclables	Required
		3	Credit 1.1	Building Reuse - Maintain Existing Walls, Floors and Roof	1 to 3
				Reuse 55%	1
				Reuse 75%	2
				Reuse 95%	3
		1	Credit 1.2	Building Reuse - Maintain Interior Nonstructural Elements	1
1	1		Credit 2	Construction Waste Management	1 to 2
				50% Recycled or Salvaged	1
				75% Recycled or Salvaged	2
		2	Credit 3	Materials Reuse	1 to 2
				Reuse 5%	1
				Reuse 10%	2
2			Credit 4	Recycled Content	1 to 2
				10% of Content	1
				20% of Content	2
2			Credit 5	Regional Materials	1 to 2
				10% of Materials	1
				20% of Materials	2
1			Credit 6	Rapidly Renewable Materials	1
	1		Credit 7	Certified Wood	1
Yes	?	No			
11	3	1	INDOOR ENVIRONMENTAL QUALITY		15 Points
Y			Prereq 1	Minimum Indoor Air Quality Performance	Required
Y			Prereq 2	Environmental Tobacco Smoke (ETS) Control	Required
	1		Credit 1	Outdoor Air Delivery Monitoring	1
	1		Credit 2	Increased Ventilation	1
1			Credit 3.1	Construction Indoor Air Quality Management Plan - During Construction	1
		1	Credit 3.2	Construction Indoor Air Quality Management Plan - Before Occupancy	1
1			Credit 4.1	Low-Emitting Materials - Adhesives and Sealants	1
1			Credit 4.2	Low-Emitting Materials - Paints and Coatings	1
1			Credit 4.3	Low-Emitting Materials - Flooring Systems	1
1			Credit 4.4	Low-Emitting Materials - Composite Wood and Agrifiber Products	1
1			Credit 5	Indoor Chemical and Pollutant Source Control	1
1			Credit 6.1	Controllability of Systems - Lighting	1
1			Credit 6.2	Controllability of Systems - Thermal Comfort	1
1			Credit 7.1	Thermal Comfort - Design	1
	1		Credit 7.2	Thermal Comfort - Verification	1
1			Credit 8.1	Daylight and Views - Daylight	1
1			Credit 8.2	Daylight and Views - Views	1
Yes	?	No			
3	3		INNOVATION IN DESIGN		6 Points
2	3		Credit 1	Innovation in Design	1 to 5
				1 Innovation or Exemplary Performance	1
				1 Innovation or Exemplary Performance	1
				Innovation or Exemplary Performance	1
				Innovation	1
				Innovation	1
1			Credit 2	LEED® Accredited Professional	1
Yes	?	No			
	4		REGIONAL PRIORITY		4 Points
	4		Credit 1	Regional Priority	1 to 4
				1 Regionally Defined Credit Achieved	1
				Regionally Defined Credit Achieved	1
				Regionally Defined Credit Achieved	1
				Regionally Defined Credit Achieved	1
Yes	?	No			
60	31	19	PROJECT TOTALS (Certification Estimates)		110 Points

Certified: 40-49 points Silver: 50-59 points Gold: 60-79 points Platinum: 80+ points

Vicinity Maps

Vicinity Maps

Vicinity Maps

KORB TREDO ARCHITECTS 790 N. Milwaukee Street, Suite 210 Milwaukee Wisconsin 53202 p: 414.273.8230 f:414.273.8231

Plat of Survey

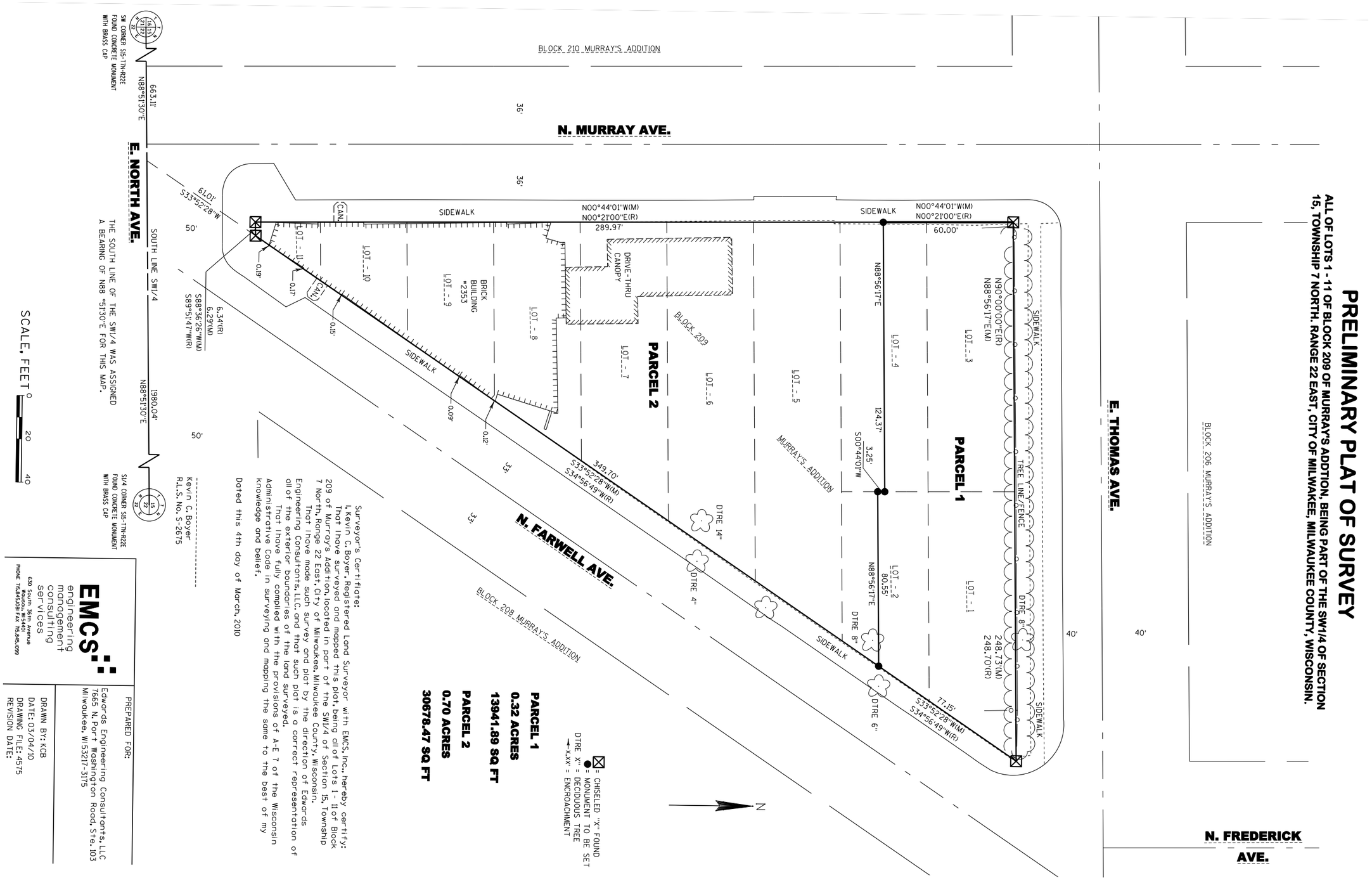

Utility Plan

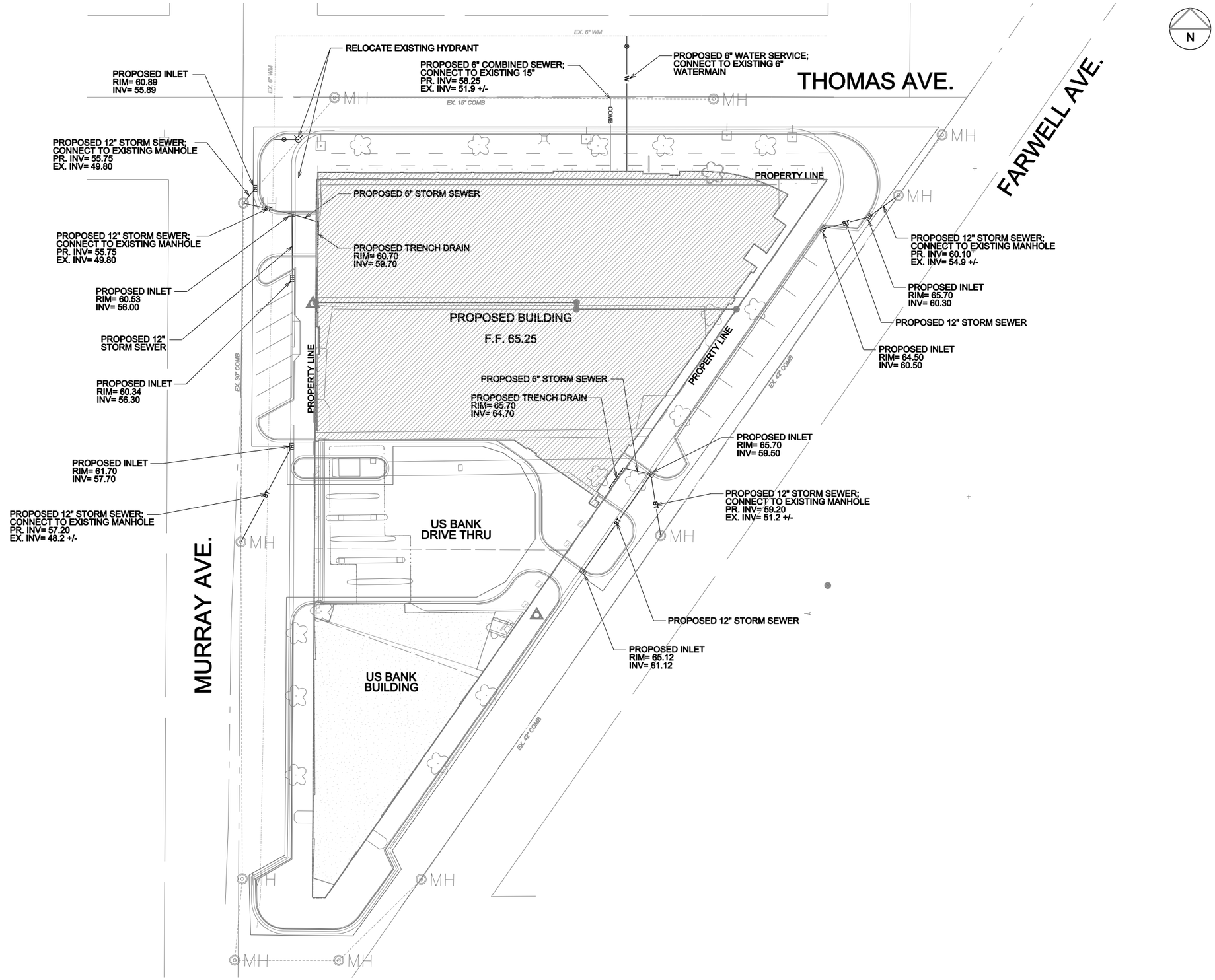

Site Grading Plan

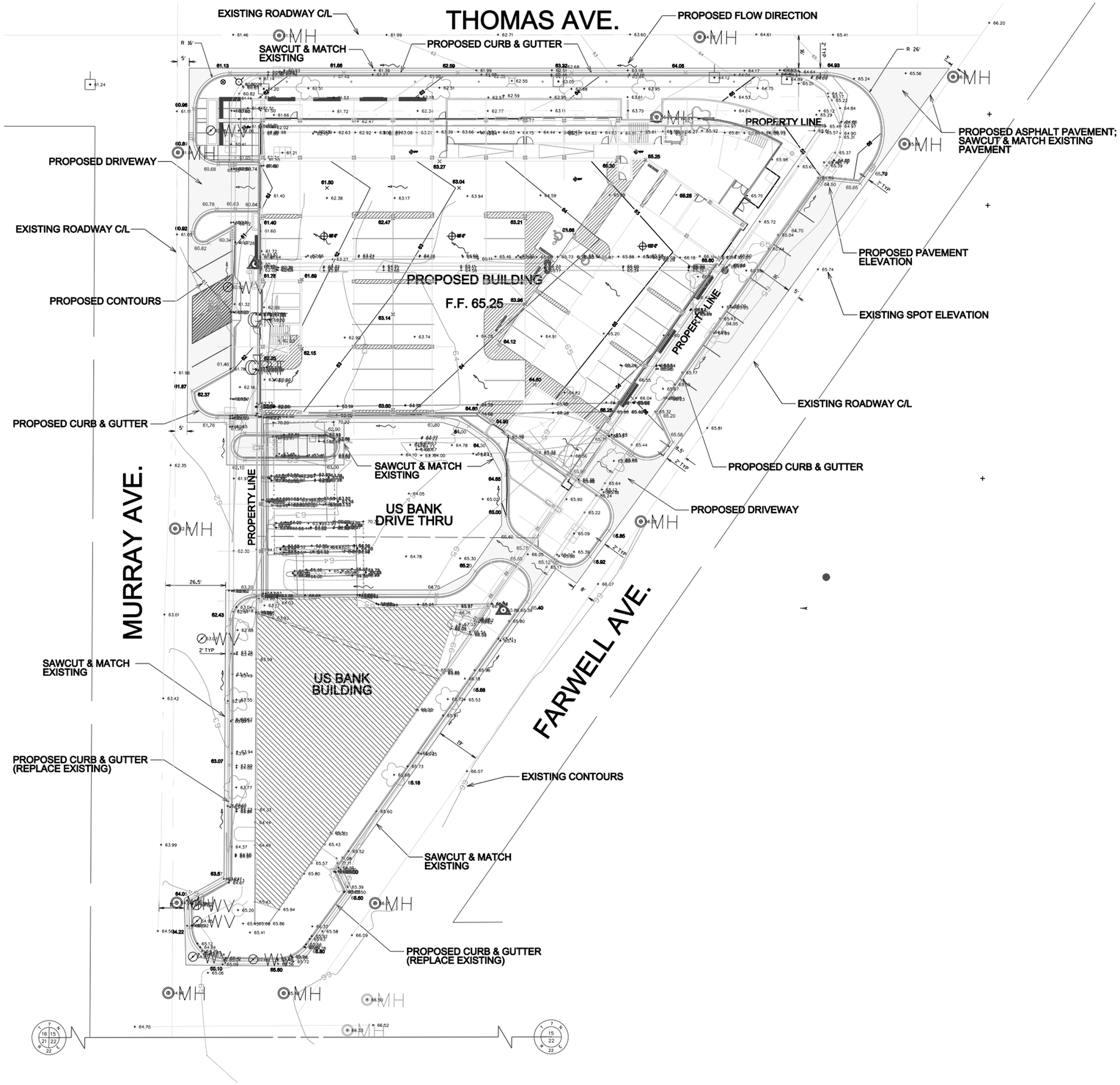

Site and Landscape Plan

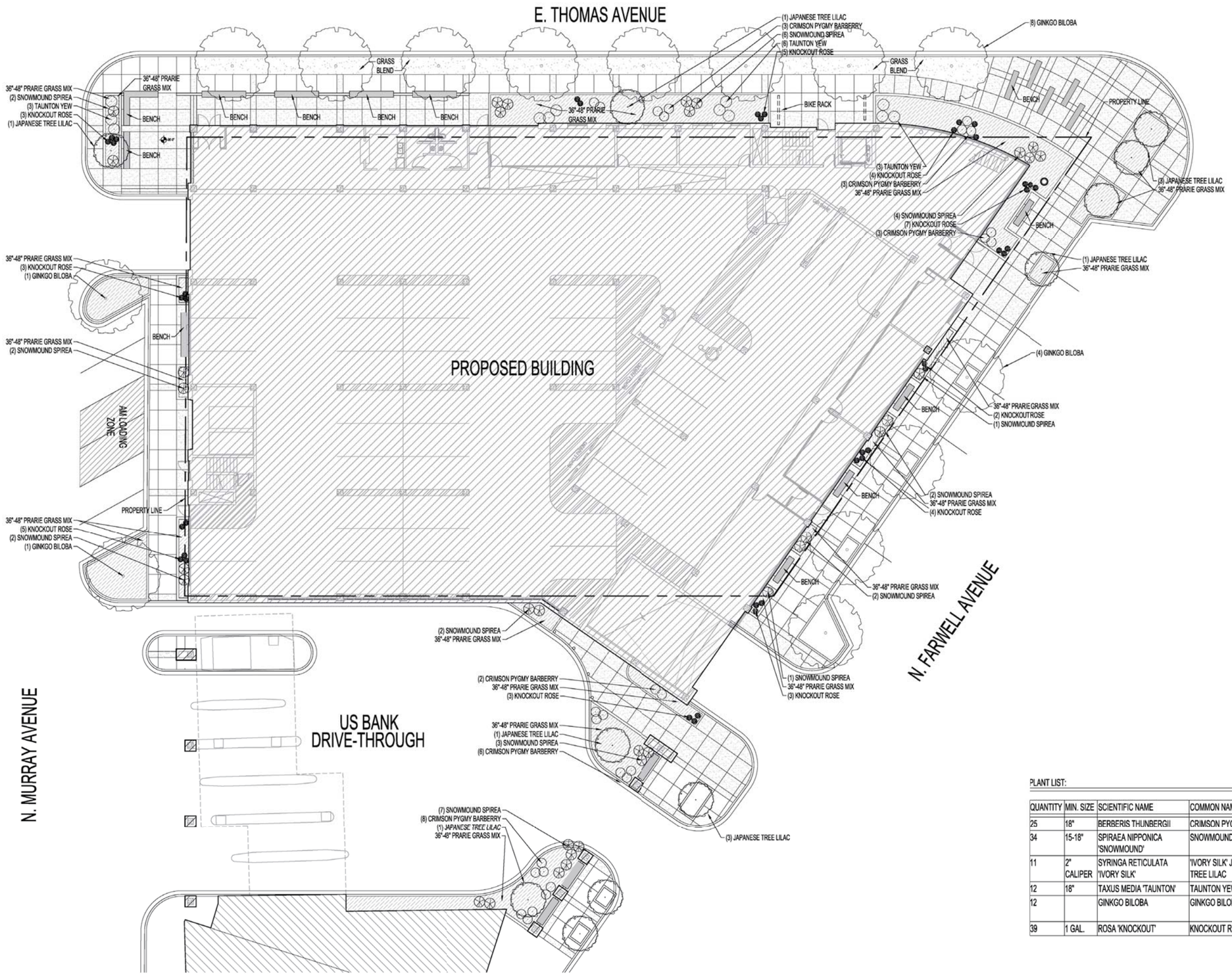

PLANT LIST:

QUANTITY	MIN. SIZE	SCIENTIFIC NAME	COMMON NAME
25	18"	BERBERIS THUNBERGII	CRIMSON PYGMY BARBERRY
34	15-18"	SPIRAEA NIPPONICA 'SNOWMOUND'	SNOWMOUND SPIREA
11	2" CALIPER	SYRINGA RETICULATA 'IVORY SILK'	'IVORY SILK' JAPANESE TREE LILAC
12	18"	TAXUS MEDIA 'TAUNTON'	TAUNTON YEW
12		GINKGO BILOBA	GINKGO BILOBA
39	1 GAL.	ROSA 'KNOCKOUT'	KNOCKOUT ROSE

First Floor Plan

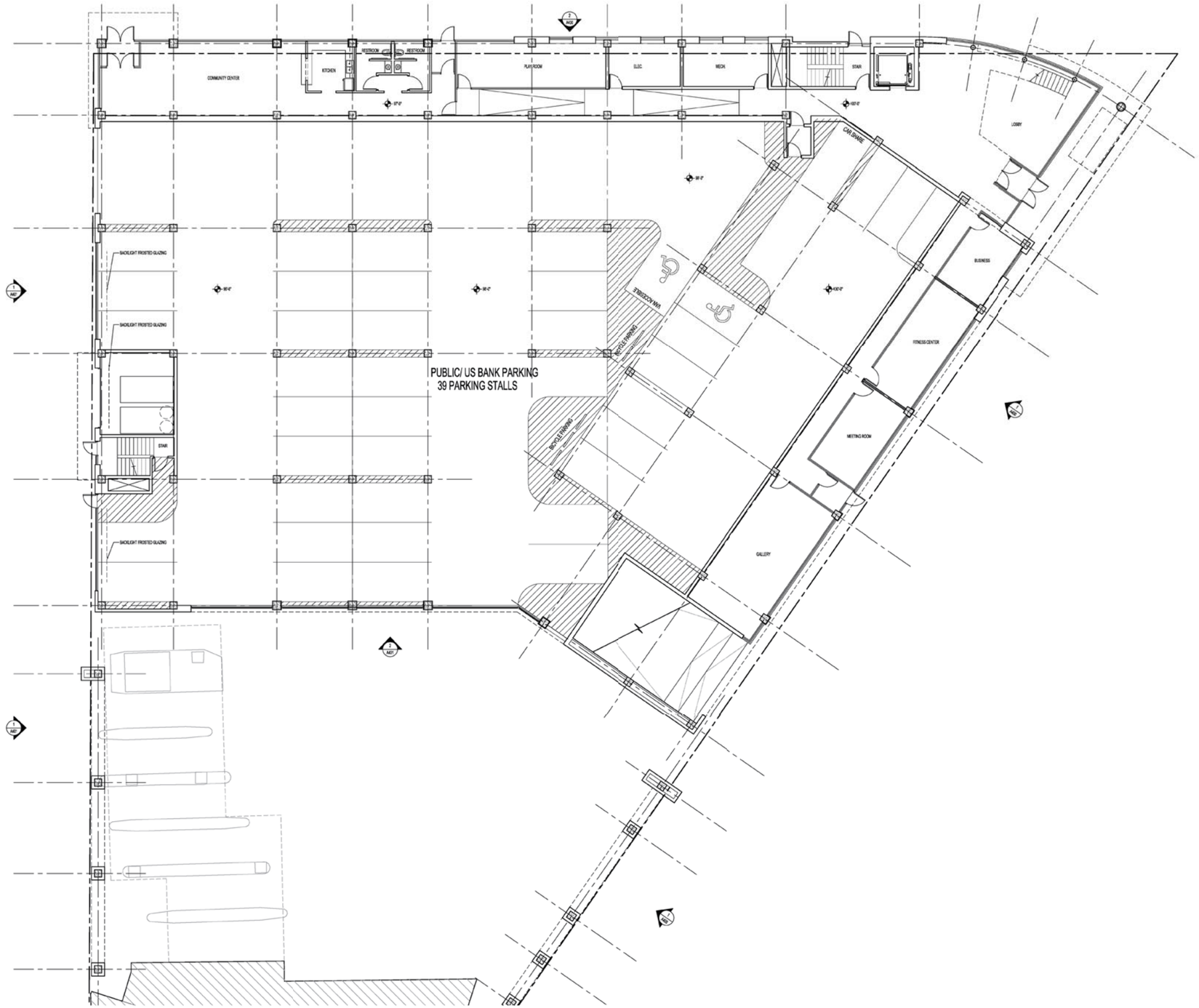

Second Floor Plan

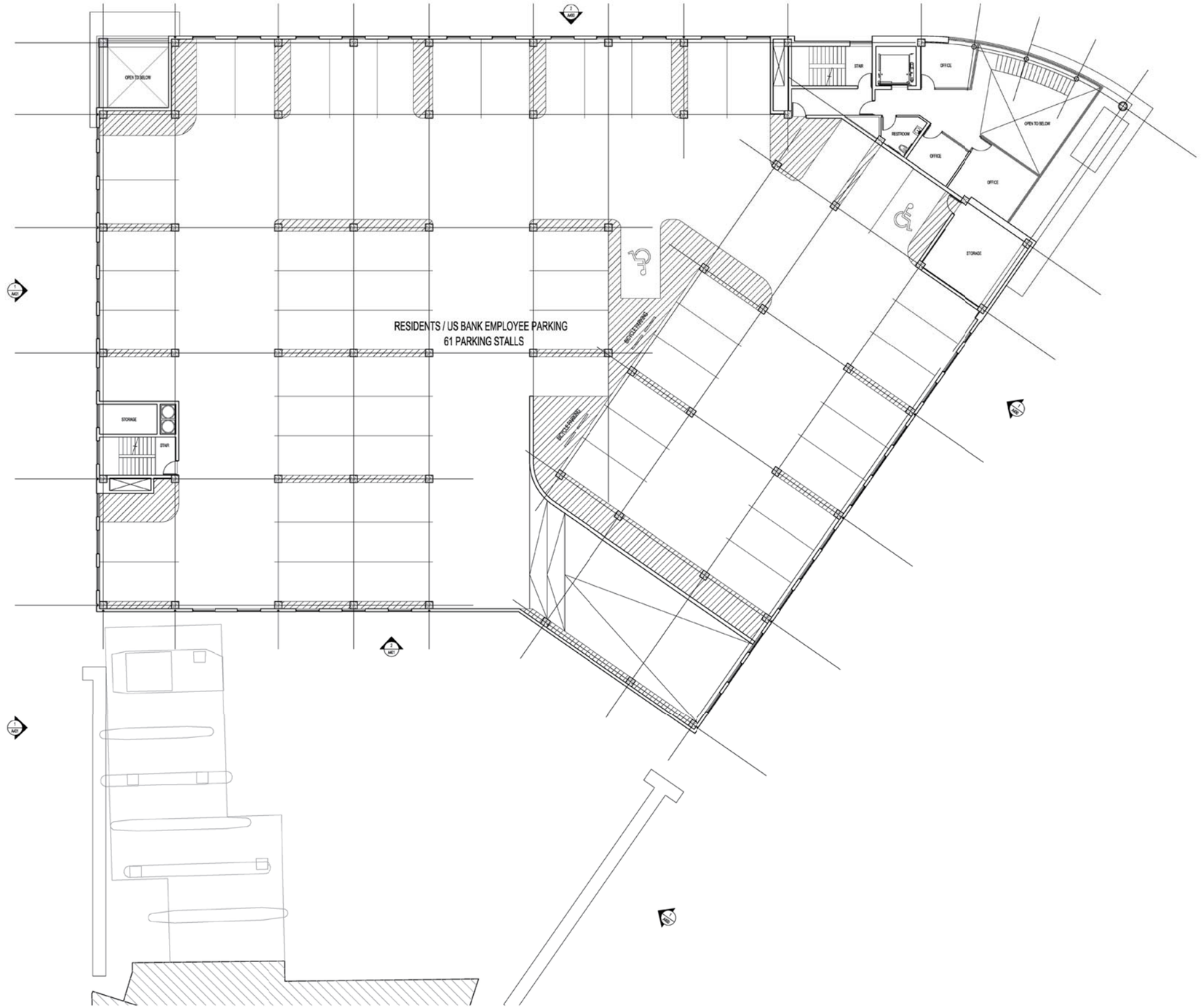

KORB TREDO ARCHITECTS 790 N. Milwaukee Street, Suite 210 Milwaukee Wisconsin 53202 p: 414.273.8230 f:414.273.8231

Third Floor Plan

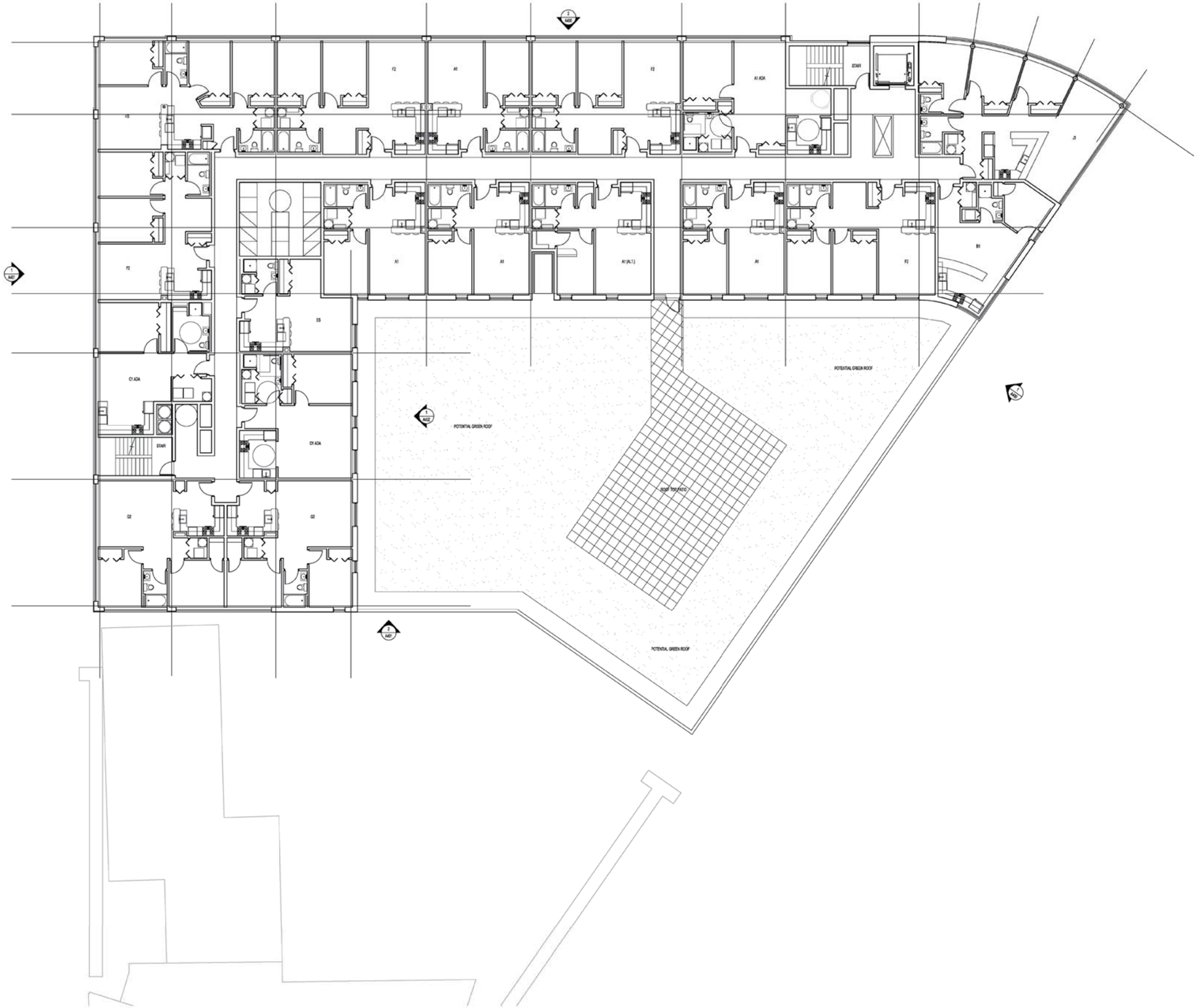

KORB TREDO ARCHITECTS 790 N. Milwaukee Street, Suite 210 Milwaukee Wisconsin 53202 p: 414.273.8230 f:414.273.8231

Fourth & Fifth Floor Plan

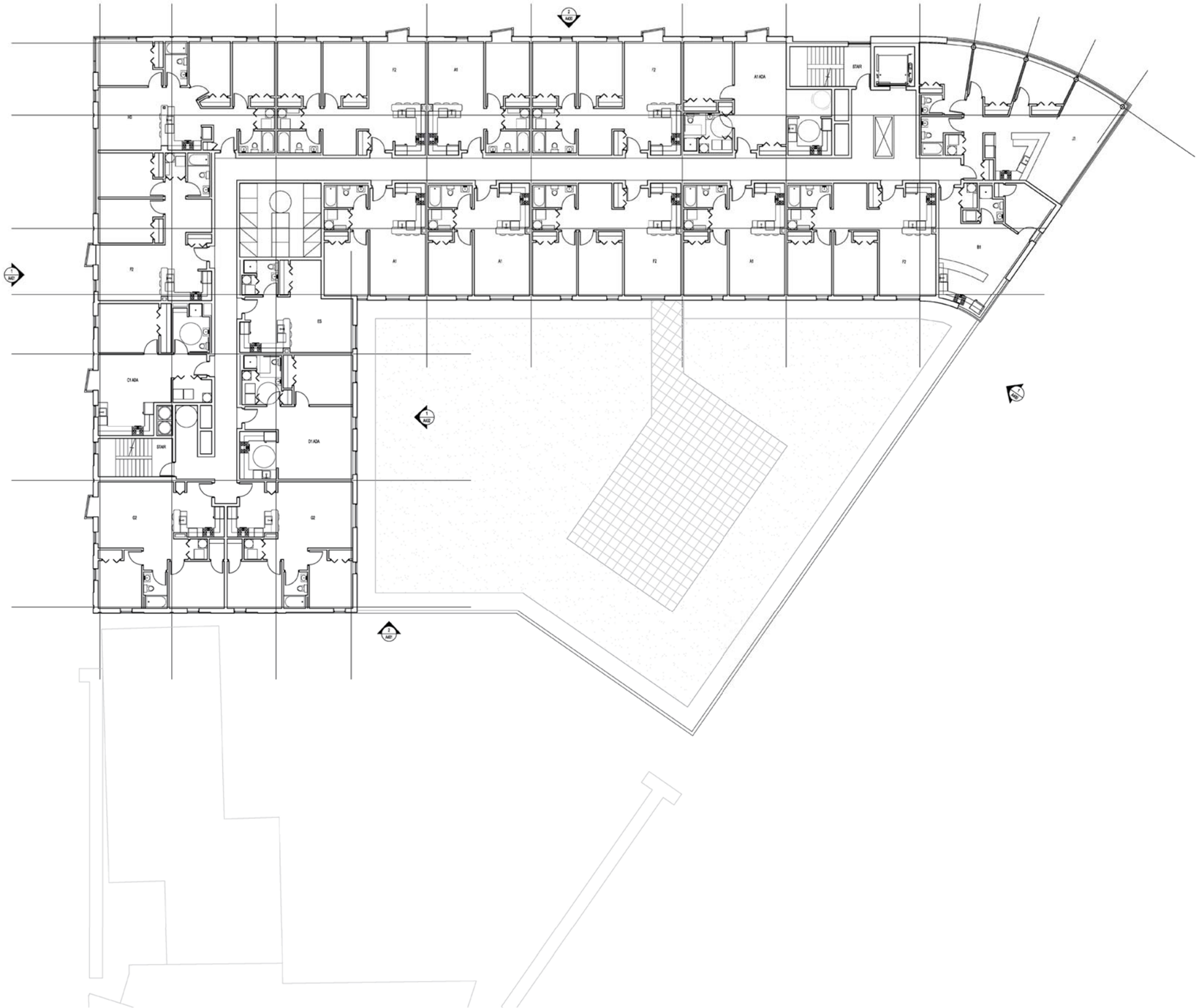

KORB TREDO ARCHITECTS 790 N. Milwaukee Street, Suite 210 Milwaukee Wisconsin 53202 p: 414.273.8230 f:414.273.8231

North Elevation

EXTERIOR MATERIALS KEY	
	MATERIAL
1	EXTERIOR WALL TYPE 1: MASONRY
2	EXTERIOR WALL TYPE 2: PERFORATED METAL PANEL
3	EXTERIOR WALL TYPE 3: PUNCHED OPENING WITH STOREFRONT SYSTEM
4	EXTERIOR WALL TYPE 4: FACE BRICK
5	EXTERIOR WALL TYPE 5: METAL PANEL
6	EXTERIOR WALL TYPE 6: CORREGATED METAL PANEL
7	EXTERIOR WALL TYPE 7: PUNCHED OPENING WITH ALUMINUM UNIT WINDOW
8	
9	
10	THERMALLY BROKEN ALUMINUM STOREFRONT DOORS
11	SUNSHADE SYSTEM - INTEGRAL TO STOREFRONT
12	OVERHEAD GARAGE DOOR - TRANSLUCENT GLASS PANELS
13	CANOPY TYPE 1
14	EXTERIOR WALL TYPE 4: VENTED PUNCHED OPENING
15	GARDEN WALL TYPE 1
16	PARKING CONTROL EQUIPMENT (PCE-1)
17	LOUVER TYPE 1
18	
19	
20	FLOOR TYPE 1: SLAB ON GRADE
21	FLOOR TYPE 2: ABOVE GRADE PRECAST
22	FLOOR TYPE 3: PRECAST RAMP
23	FLOOR TYPE 4: WOOD TRUSSES
24	ROOF TYPE 1: MEMBRANE
25	ROOF TYPE 2: GREEN INTENSIVE

West Elevation

EXTERIOR MATERIALS KEY	
	MATERIAL
1	EXTERIOR WALL TYPE 1: MASONRY
2	EXTERIOR WALL TYPE 2: PERFORATED METAL PANEL
3	EXTERIOR WALL TYPE 3: PUNCHED OPENING WITH STOREFRONT SYSTEM
4	EXTERIOR WALL TYPE 4: FACE BRICK
5	EXTERIOR WALL TYPE 5: METAL PANEL
6	EXTERIOR WALL TYPE 6: CORREGATED METAL PANEL
7	EXTERIOR WALL TYPE 7: PUNCHED OPENING WITH ALUMINUM UNIT WINDOW
8	
9	
10	THERMALLY BROKEN ALUMINUM STOREFRONT DOORS
11	SUNSHADE SYSTEM - INTEGRAL TO STOREFRONT
12	OVERHEAD GARAGE DOOR - TRANSLUCENT GLASS PANELS
13	CANOPY TYPE 1
14	EXTERIOR WALL TYPE 4: VENTED PUNCHED OPENING
15	GARDEN WALL TYPE 1
16	PARKING CONTROL EQUIPMENT (PCE-1)
17	LOUVER TYPE 1
18	
19	
20	FLOOR TYPE 1: SLAB ON GRADE
21	FLOOR TYPE 2: ABOVE GRADE PRECAST
22	FLOOR TYPE 3: PRECAST RAMP
23	FLOOR TYPE 4: WOOD TRUSSES
24	ROOF TYPE 1: MEMBRANE
25	ROOF TYPE 2: GREEN INTENSIVE

East Elevation

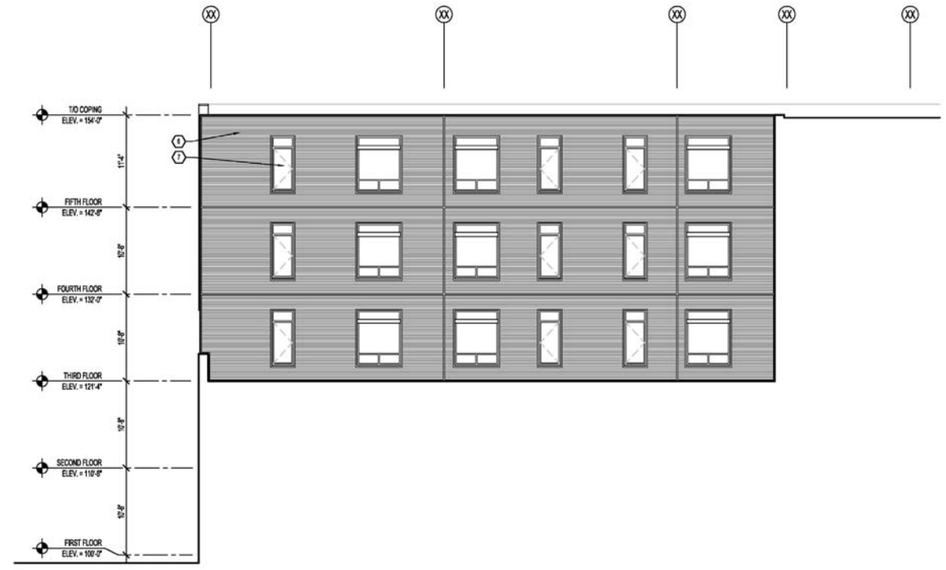

	EXTERIOR MATERIALS KEY
	MATERIAL
1	EXTERIOR WALL TYPE 1: MASONRY
2	EXTERIOR WALL TYPE 2: PERFORATED METAL PANEL
3	EXTERIOR WALL TYPE 3: PUNCHED OPENING WITH STOREFRONT SYSTEM
4	EXTERIOR WALL TYPE 4: FACE BRICK
5	EXTERIOR WALL TYPE 5: METAL PANEL
6	EXTERIOR WALL TYPE 6: CORREGATED METAL PANEL
7	EXTERIOR WALL TYPE 7: PUNCHED OPENING WITH ALUMINUM UNIT WINDOW
8	
9	
10	THERMALLY BROKEN ALUMINUM STOREFRONT DOORS
11	SUNSHADE SYSTEM - INTEGRAL TO STOREFRONT
12	OVERHEAD GARAGE DOOR - TRANSLUCENT GLASS PANELS
13	CANOPY TYPE 1
14	EXTERIOR WALL TYPE 4: VENTED PUNCHED OPENING
15	GARDEN WALL TYPE 1
16	PARKING CONTROL EQUIPMENT (PCE-1)
17	LOUVER TYPE 1
18	
19	
20	FLOOR TYPE 1: SLAB ON GRADE
21	FLOOR TYPE 2: ABOVE GRADE PRECAST
22	FLOOR TYPE 3: PRECAST RAMP
23	FLOOR TYPE 4: WOOD TRUSSES
24	ROOF TYPE 1: MEMBRANE
25	ROOF TYPE 2: GREEN INTENSIVE

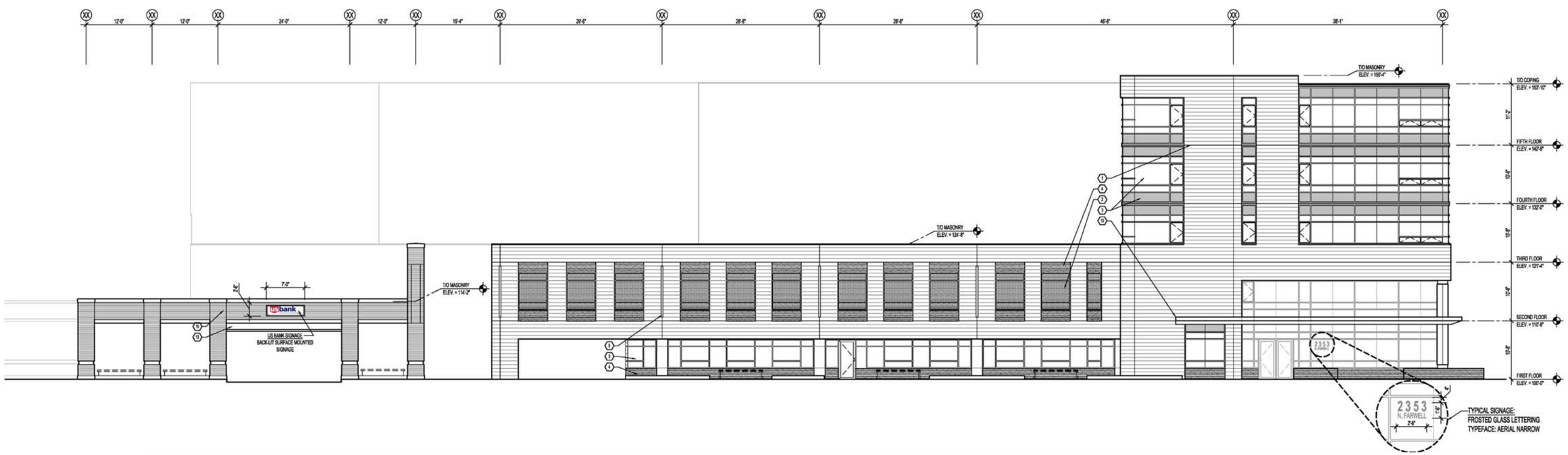

South Elevation

EXTERIOR MATERIALS KEY	
	MATERIAL
1	EXTERIOR WALL TYPE 1: MASONRY
2	EXTERIOR WALL TYPE 2: PERFORATED METAL PANEL
3	EXTERIOR WALL TYPE 3: PUNCHED OPENING WITH STOREFRONT SYSTEM
4	EXTERIOR WALL TYPE 4: FACE BRICK
5	EXTERIOR WALL TYPE 5: METAL PANEL
6	EXTERIOR WALL TYPE 6: CORREGATED METAL PANEL
7	EXTERIOR WALL TYPE 7: PUNCHED OPENING WITH ALUMINUM UNIT WINDOW
8	
9	
10	THERMALLY BROKEN ALUMINUM STOREFRONT DOORS
11	SUNSHADE SYSTEM - INTEGRAL TO STOREFRONT
12	OVERHEAD GARAGE DOOR - TRANSLUCENT GLASS PANELS
13	CANOPY TYPE 1
14	EXTERIOR WALL TYPE 4: VENTED PUNCHED OPENING
15	GARDEN WALL TYPE 1
16	PARKING CONTROL EQUIPMENT (PCE-1)
17	LOUVER TYPE 1
18	
19	
20	FLOOR TYPE 1: SLAB ON GRADE
21	FLOOR TYPE 2: ABOVE GRADE PRECAST
22	FLOOR TYPE 3: PRECAST RAMP
23	FLOOR TYPE 4: WOOD TRUSSES
24	ROOF TYPE 1: MEMBRANE
25	ROOF TYPE 2: GREEN INTENSIVE

Typical Construction Details

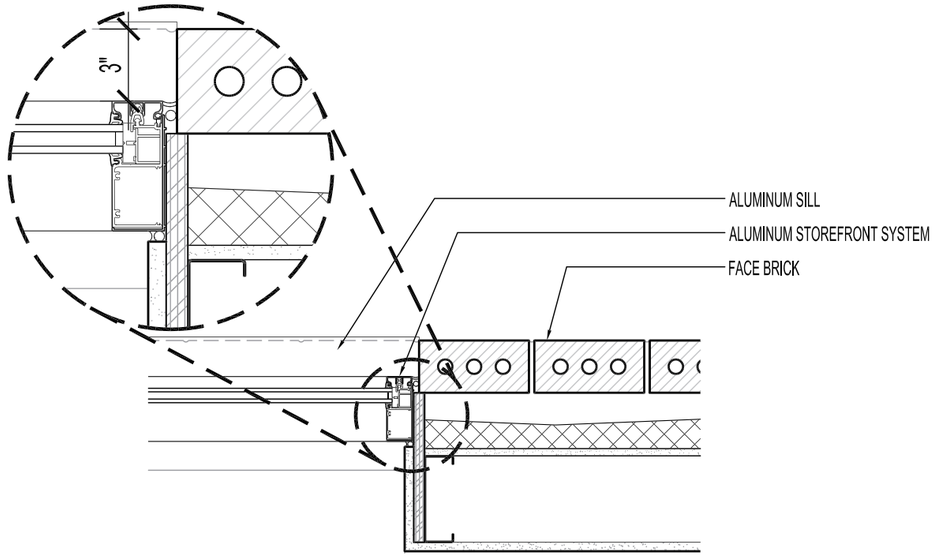

Typical Jamb Detail @ Face Brick

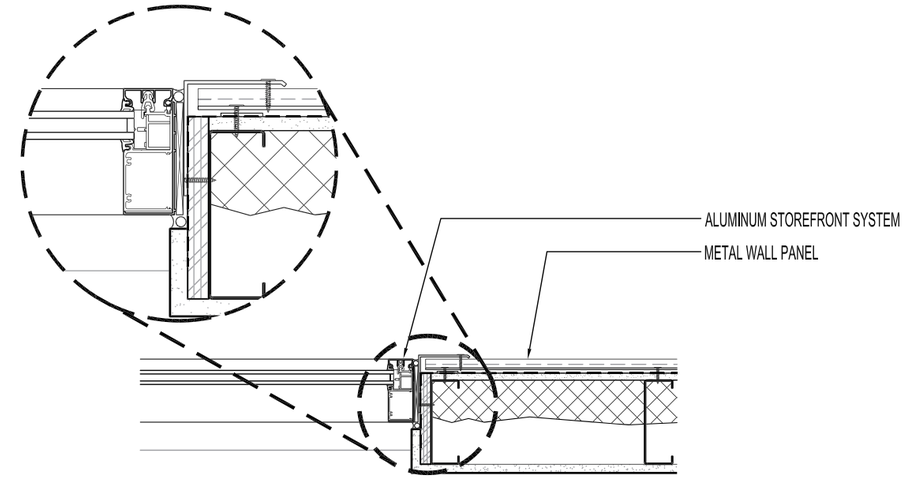

Typical Jamb Detail @ Metal Wall Panel

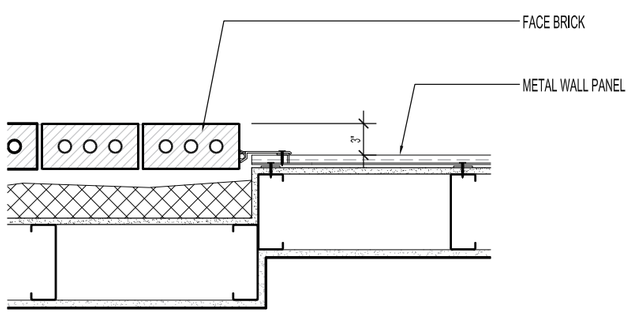

Plan Detail @ Brick / Metal Wall Panel

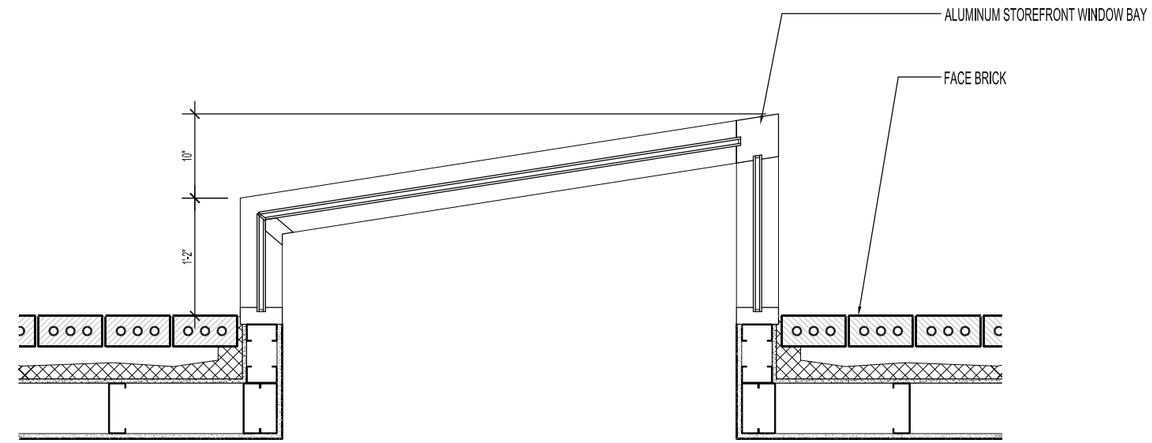

Plan Detail @ Typical Punched Window Bay

N. Farwell Avenue

Site Images

KORB TREDO ARCHITECTS 790 N. Milwaukee Street, Suite 210 Milwaukee Wisconsin 53202 p: 414.273.8230 f:414.273.8231

Building Images - Aerial Image

KORB TREDO ARCHITECTS 790 N. Milwaukee Street, Suite 210 Milwaukee Wisconsin 53202 p: 414.273.8230 f:414.273.8231

Building Images - Aerial Image

KORB TREDO ARCHITECTS 790 N. Milwaukee Street, Suite 210 Milwaukee Wisconsin 53202 p: 414.273.8230 f:414.273.8231

Building Images - Northeast Corner

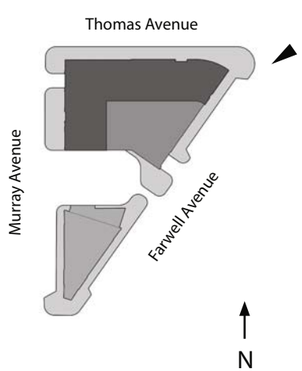

KORB TREDO ARCHITECTS 790 N. Milwaukee Street, Suite 210 Milwaukee Wisconsin 53202 p: 414.273.8230 f:414.273.8231

Building Images - Northeast Corner

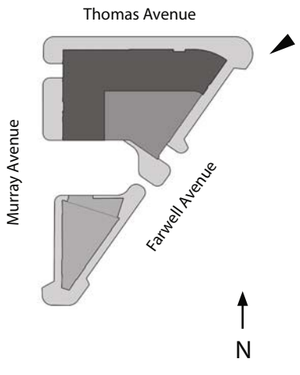

KORB TREDO ARCHITECTS 790 N. Milwaukee Street, Suite 210 Milwaukee Wisconsin 53202 p: 414.273.8230 f:414.273.8231

Building Images - Northwest Corner

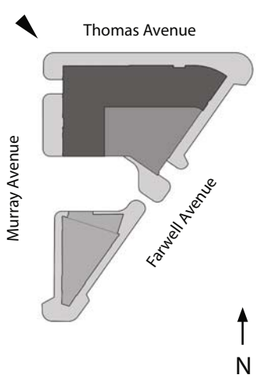

KORB TREDO ARCHITECTS 790 N. Milwaukee Street, Suite 210 Milwaukee Wisconsin 53202 p: 414.273.8230 f:414.273.8231

Building Images - Thomas Avenue

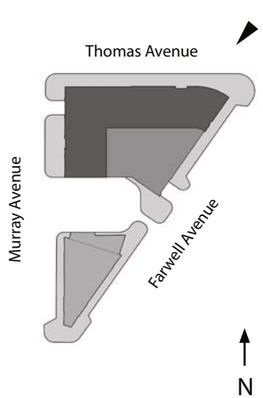

KORB TREDO ARCHITECTS 790 N. Milwaukee Street, Suite 210 Milwaukee Wisconsin 53202 p: 414.273.8230 f:414.273.8231

Building Images - Farwell Avenue

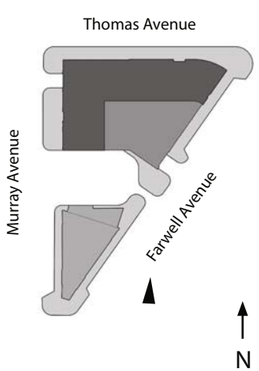

KORB TREDO ARCHITECTS 790 N. Milwaukee Street, Suite 210 Milwaukee Wisconsin 53202 p: 414.273.8230 f:414.273.8231

Building Images - Murray Avenue

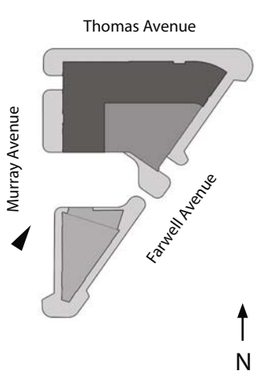

KORB TREDO ARCHITECTS 790 N. Milwaukee Street, Suite 210 Milwaukee Wisconsin 53202 p: 414.273.8230 f:414.273.8231