15TH & NORTH HOUSING DEVELOPMENT

1500-1504, 1524, & 1528-1534 WEST NORTH AVENUE, MILWAUKEE, WISCONSIN

7/29/2016: R.8/3/2016

DPD SUBMITTAL

CAP PROJECT #: 150303

OWNERS:
LEGACY MIDWEST RENEWAL CORPORATION

1200 WEST NORTH AVENUE
MILWAUKEE, WI 53205

EVERGREEN REAL ESTATE GROUP

566 WEST LAKE STREET - SUITE 400
CHICAGO, IL 60661

CONSULTING ARCHITECT:
CONTINUUM ARCHITECTS + PLANNERS, S.C.

228 SOUTH FIRST STREET - SUITE 301
MILWAUKEE, WI 53204
TEL. (414) 220-9640
FAX. (414) 220-9595

CONSULTING CIVIL ENGINEER:
AYERS ASSOCIATES

101 EAST BADGER ROAD
MADISON, WI 53713
TEL. (608) 255-0800

CONSULTING STRUCTURAL ENGINEER:
SPIRE ENGINEERING

600 WEST VIRGINIA STREET - SUITE 102
MILWAUKEE, WI 53204
TEL. (414) 278-9200

SHEET INDEX:

DPD-1	COVER SHEET / VICINITY MAP / PROJECT TEAM / SHEET INDEX
DPD-2	EXISTING CONDITIONS, SITE DEMOLITION, AND EROSION CONTROL PLAN
DPD-3A	PROPOSED ARCHITECTURAL SITE AND LANDSCAPE PLAN
DPD-3B	PROPOSED ARCHITECTURAL SITE AND FIRST FLOOR PLAN
DPD-4	PROPOSED SITE PLAN
DPD-5	PROPOSED GRADING PLAN
DPD-6	PROPOSED UTILITY PLAN
DPD-7A	PROPOSED SITE DETAILS
DPD-7B	PROPOSED SITE DETAILS
DPD-8A1	PROPOSED DEVELOPMENT EXTERIOR IMAGES
DPD-8A2	PROPOSED DEVELOPMENT EXTERIOR IMAGES
DPD-8B	PROPOSED DEVELOPMENT EXTERIOR ELEVATIONS
DPD-8C	PROPOSED BUILDING ELEVATIONS - SOUTH
DPD-8D	PROPOSED BUILDING ELEVATIONS - EAST
DPD-8E	PROPOSED BUILDING ELEVATIONS - WEST
DPD-8F	PROPOSED BUILDING ELEVATIONS - NORTH
DPD-9	PROPOSED SIGNAGE

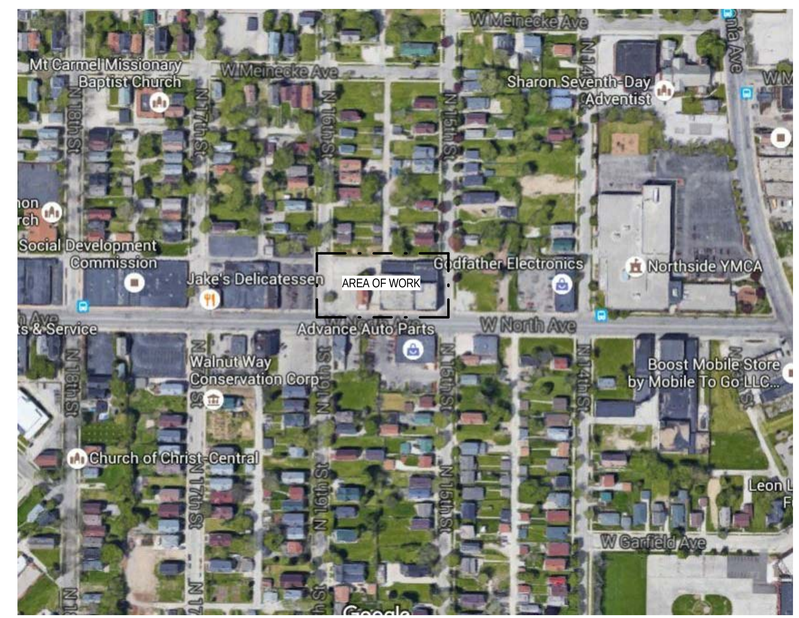

continuum
ARCHITECTS + PLANNERS

Programming
Campus + Master Planning
Interior Design
Sustainable Design
Historical Preservation/
Renovation
Project Management

C:\Users\conlynn.goetsch\Documents\150303 - Blommer Building_conlynn.goetsch.rvt
8/3/2016 9:50:31 AM

T 414.220.9640
F 414.220.9595

P.O. Box 510663
Milwaukee, WI
53203

CONSULTANTS:

COPYRIGHT 2016, CONTINUUM ARCHITECTS + PLANNERS S.C.

15TH & NORTH HOUSING DEVELOPMENT

1500-1504, 1524, & 1528-1534 WEST NORTH AVENUE, MILWAUKEE, WISCONSIN

SHEET TITLE:
COVER SHEET / VICINITY MAP / PROJECT TEAM / SHEET INDEX

REVISIONS:

SCALE	VARIES
PROJECT NUMBER	150303
SET TYPE	DPD SUBMITTAL
DATE ISSUED	7/29/2016: R.8/3/2016
SHEET NUMBER	DPD-1

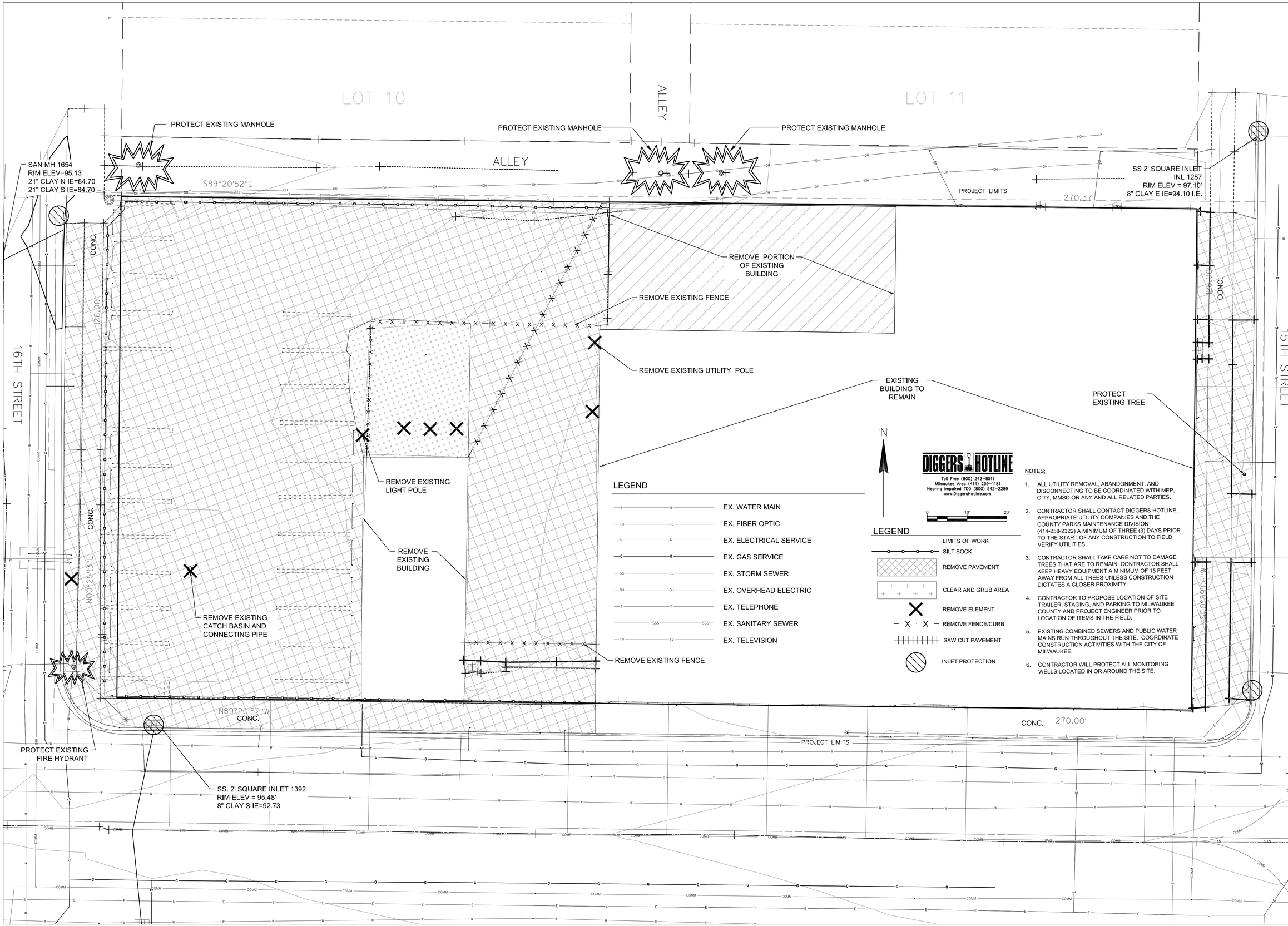

LEGEND

- EX. WATER MAIN
- EX. FIBER OPTIC
- EX. ELECTRICAL SERVICE
- EX. GAS SERVICE
- EX. STORM SEWER
- EX. OVERHEAD ELECTRIC
- EX. TELEPHONE
- EX. SANITARY SEWER
- EX. TELEVISION

DIGGERS HOTLINE

Toll Free (800) 242-8511
Milwaukee Area (414) 259-1181
Hearing Impaired TDD (800) 542-2289
www.DiggersHotline.com

LEGEND

- LIMITS OF WORK
- SILT SOCK
- REMOVE PAVEMENT
- CLEAR AND GRUB AREA
- REMOVE ELEMENT
- REMOVE FENCE/CURB
- SAW CUT PAVEMENT
- INLET PROTECTION

NOTES:

1. ALL UTILITY REMOVAL, ABANDONMENT, AND DISCONNECTING TO BE COORDINATED WITH MEP, CITY, MMSD OR ANY AND ALL RELATED PARTIES.
2. CONTRACTOR SHALL CONTACT DIGGERS HOTLINE, APPROPRIATE UTILITY COMPANIES AND THE COUNTY PARKS MAINTENANCE DIVISION (414-258-2322) A MINIMUM OF THREE (3) DAYS PRIOR TO THE START OF ANY CONSTRUCTION TO FIELD VERIFY UTILITIES.
3. CONTRACTOR SHALL TAKE CARE NOT TO DAMAGE TREES THAT ARE TO REMAIN. CONTRACTOR SHALL KEEP HEAVY EQUIPMENT A MINIMUM OF 15 FEET AWAY FROM ALL TREES UNLESS CONSTRUCTION DICTATES A CLOSER PROXIMITY.
4. CONTRACTOR TO PROPOSE LOCATION OF SITE TRAILER, STAGING, AND PARKING TO MILWAUKEE COUNTY AND PROJECT ENGINEER PRIOR TO LOCATION OF ITEMS IN THE FIELD.
5. EXISTING COMBINED SEWERS AND PUBLIC WATER MAINS RUN THROUGHOUT THE SITE. COORDINATE CONSTRUCTION ACTIVITIES WITH THE CITY OF MILWAUKEE.
6. CONTRACTOR WILL PROTECT ALL MONITORING WELLS LOCATED IN OR AROUND THE SITE.

T 414.220.9640
F 414.220.9595

P.O. Box 510663
Milwaukee, WI
53203

CONSULTANTS:

COPYRIGHT 2016, CONTINUUM ARCHITECTS + PLANNERS S.C.

15TH & NORTH HOUSING DEVELOPMENT

NORTH AVENUE BETWEEN 15TH AND 16TH STREETS

SHEET TITLE:
EXISTING CONDITIONS, SITE DEMOLITION & EROSION CONTROL PLAN

REVISIONS:

SCALE	VARIES
PROJECT NUMBER	150303
SET TYPE	**DPD SUBMITTAL**
DATE ISSUED	**07/29/2016**
SHEET NUMBER	**DPD-2**

PLANT LIST

SYMBOL	BOTANICAL NAME	COMMON NAME	SIZE	SPACING	MATURE SIZE
	ORNAMENTAL TREES				
AGA	Amelanchier x grandiflora "Autumn Brilliance"	Autumn Brilliance Serviceberry	10"-12" clump BB	as shown	20'h x 15'w
AGA	Amelanchier x grandiflora "Autumn Brilliance"	Autumn Brilliance Serviceberry	10"-12" clump BB	as shown	20'h x 15'w
CPP	Crataegus phaenopyrum	Washington Hawthorn	10"-12" clump BB	as shown	30'h x 25'w
MPF	Malus "Prairie Fire"	Prairie Fire Crabapple	6-8' BB	as shown	20'h x 20'w
	DECIDUOUS SHRUBS				
DVL	Diervilla lonecera	Dwarf Bush Honeysuckle	5 gal.	4'	4'h x 4'w
PON	Physocarpus opulifolius "Nanus"	Dwarf Ninebark	24" cont.	4'	5'h x 5'w
RRB	Rosa rugosa "Belle Poitevine"	Belle Poitevine Rugosa Rose	24" cont.	5'	4-5'h x 4-5'w
SGM	Spiraea x "Gold mound"	Gold Mound Spirea	24" cont.	4'	3'h x 3-4'w
SUF	Spiraea japonica "Froebelli"	Froebel Spirea	24" cont.	4'	3-4'-h x 4-5'w
	EVERGREEN SHRUBS				
JCI	Juniperus chinensis "Iowa"	Iowa Juniper	42" BB	5'	10-15' x 4-5'w
JCK	Juniperus chinensis "Kallay's Compact"	Kallay's Compact Pfitzer Junipe r	5 gal.	4'	2-3'h x 5'w
	PERENNIALS				
CMA	Chrysanthemum maxima "Alaska"	Alaska Daisy	1 gal.	24"	24"h X 18"w
EPK	Echinacea purpurea "Kim's Knee High"	Kim's Knee High Coneflower	1 gal.	18"	18"h x 18"w
HRR	Hermerocalis "Rosy Returns"	Rosy Returns Daylily	1 gal.	18"	18"h x 18-20"w
PRL	Perovskia atripicifolia "Little Spire"	Little Spire Russian Sage	1 gal.	18"	18"h x 18"w
SAJ	Sedum "Autumn Joy"	Autmn Joy Sedum	1 gal.	18"	18"h x 18"w
	ORNAMENTAL GRASSES				
CAK	Calamagrostis acutiflora "Karl Foerster"	Feather Reed Grass	5 gal.	36"	5'h x 30"w
MSP	Miscanthus sinensis "Purpurescens"	Purple Maiden Grass	1 gal.	36"	4-6'h x 36"w
PVH	Panicum virgatum "Heavy Metal"	Heavy Metal Switch Grass	5 gal.	36"	4-5'h x 30"w

SITE / LANDSCAPE PLAN KEY

- STREET PARKING
- BUS STOP
- STREET TREE
- GRASS TERRACE

NOTES

ALL NEW LIGHTING WITHIN DEVELOPMENT WILL COMPLY WITH CITY OF MILWAUKEE ORDINANCES.

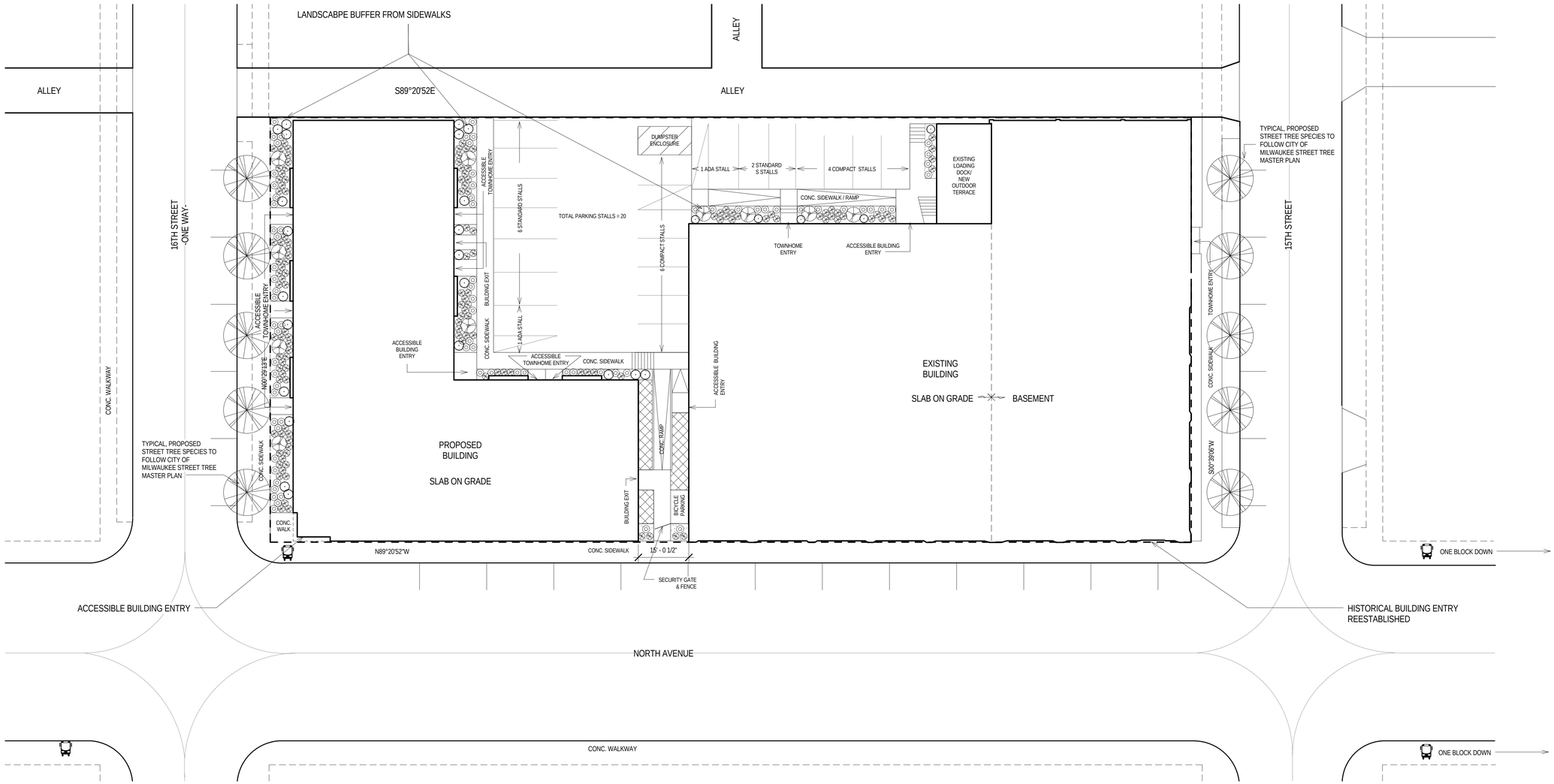

1 PROPOSED ARCHITECTURAL SITE AND LANDSCAPE PLAN

Scale: 1/16" = 1'-0"

0' 1" 2" 4" 6"

T 414.220.9640
F 414.220.9595

P.O. Box 510663
Milwaukee, WI
53203

CONSULTANTS:

COPYRIGHT 2016, CONTINUUM ARCHITECTS + PLANNERS S.C.

15TH + NORTH APARTMENTS

1500 WEST NORTH AVENUE, MILWAUKEE, WI

SHEET TITLE: PROPOSED ARCHITECTURAL SITE AND LANDSCAPE PLAN

REVISIONS:

SCALE	VARIES
PROJECT NUMBER	150303
SET TYPE	DPD SUBMITTAL
DATE ISSUED	07/29/2016: R.8/3/2016
SHEET NUMBER	DPD-3A

NOTES

ACCESSIBLE ROUTE

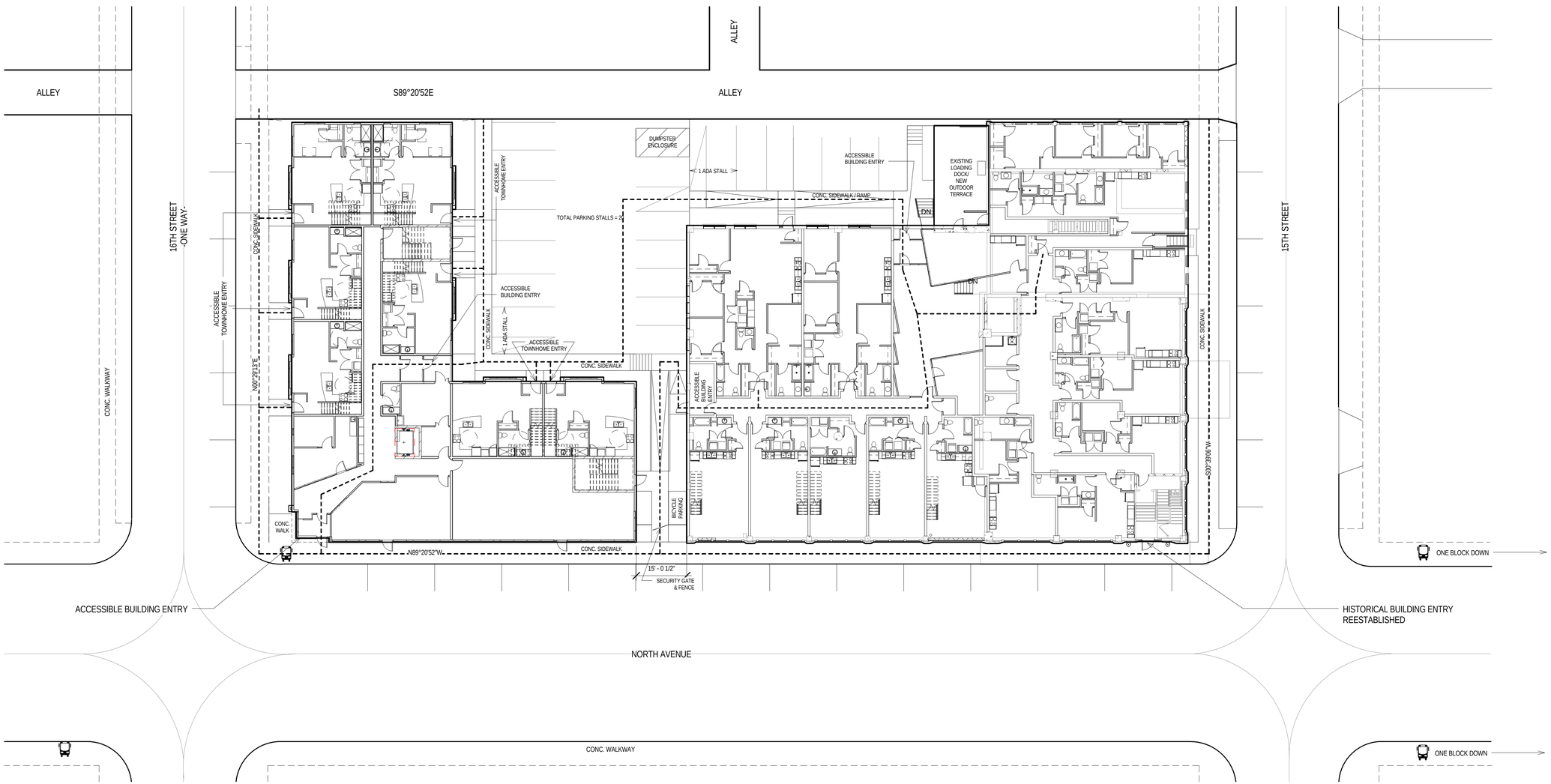

1 PROPOSED ARCHITECTURAL SITE AND FIRST FLOOR PLAN

Scale: 1/16" = 1'-0"

0' 4' 8' 16' 24'

T 414.220.9640
F 414.220.9595

P.O. Box 510663
Milwaukee, WI
53203

CONSULTANTS:

COPYRIGHT 2016, CONTINUUM ARCHITECTS + PLANNERS S.C.

15TH + NORTH APARTMENTS

1500 WEST NORTH AVENUE, MILWAUKEE, WI

SHEET TITLE: PROPOSED ARCHITECTURAL SITE AND FIRST FLOOR PLAN

REVISIONS:

SCALE	VARIES
PROJECT NUMBER	150303
SET TYPE	DPD SUBMITTAL
DATE ISSUED	07/29/2016: R.8/3/2016
SHEET NUMBER	DPD-3B

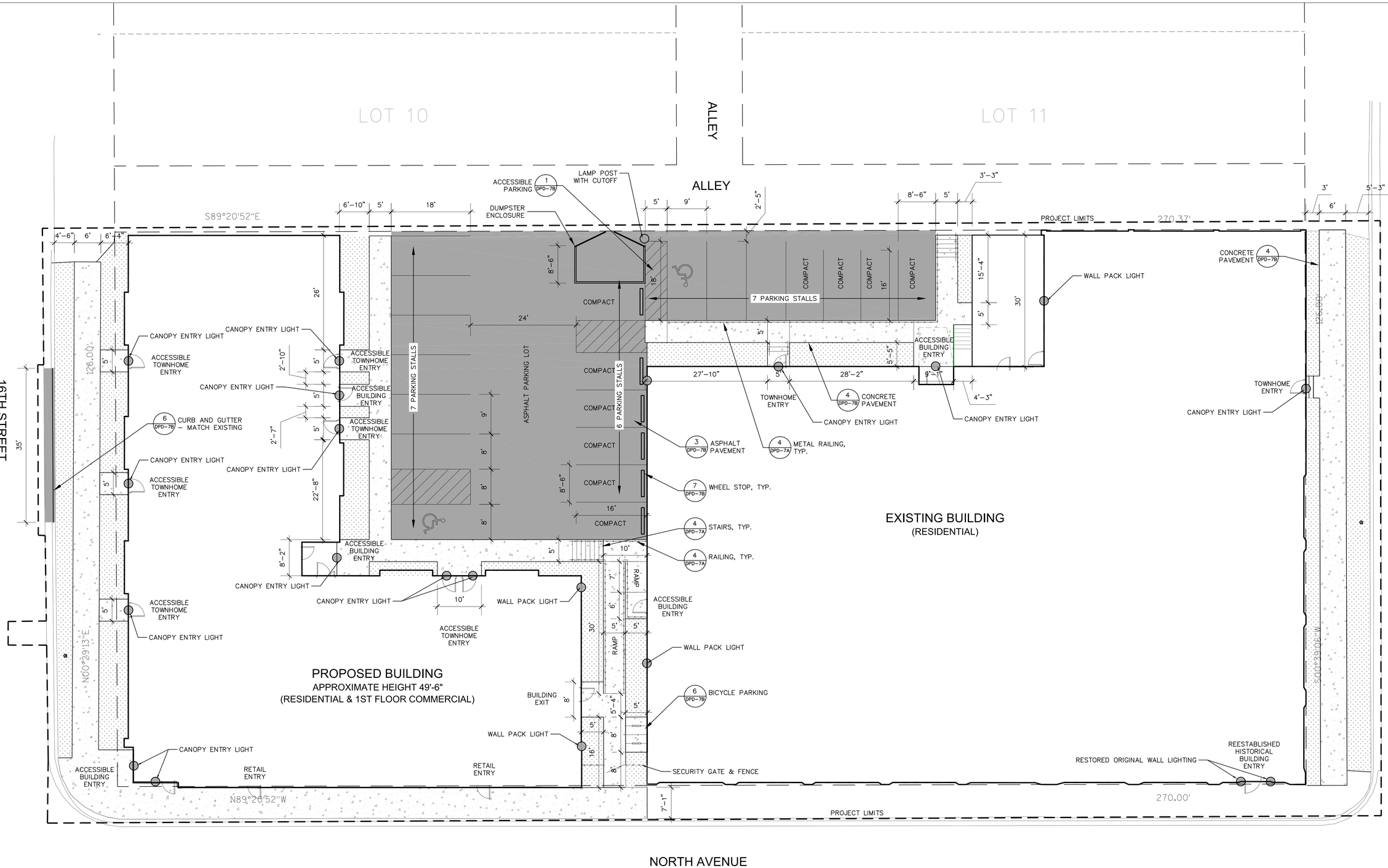

NOTES:

1. ALL WRITTEN DIMENSIONS SUPERSEDE SCALED DIMENSIONS. DIMENSIONS ARE REFERENCED PARALLEL OR PERPENDICULAR TO THE PROPOSED ENTITIES. FIELD ADJUST AS NECESSARY.
2. CONTRACTOR SHALL INSTALL EXPANSION JOINTS BETWEEN PLAIN CONCRETE, EXISTING CONCRETE, CURBS, OR STRUCTURES IN ADDITION TO AREAS AS NEEDED. PROVIDE JOINTING PLAN TO PROJECT ARCHITECT PRIOR TO INSTALLATION.
3. THE CONTRACTOR IS RESPONSIBLE FOR SITE STAKING. ALL PROPOSED SITE FEATURES SHALL BE STAKED IN FIELD PRIOR TO CONSTRUCTION. ALL CURVES SHALL BE SMOOTH AND CONTINUOUS WITH CAREFULLY MATCHED TANGENTS. CAD FILE TO BE PROVIDED UPON REQUEST.
4. SEPARATE CONCRETE POURS MUST BE DOWELED UNLESS OTHERWISE PROPOSED BY CONTRACTOR IN WRITING.

LEGEND

- ASPHALT
- CONCRETE
- PLANTING AREAS (SEE LANDSCAPE PLAN)
- LIGHT

DIGGERS HOTLINE
Toll Free (800) 242-8511
Milwaukee Area (414) 259-1181
Hearing Impaired TDD (800) 542-2289
www.DiggersHotline.com

0 10' 20'

N

T 414.220.9640
F 414.220.9595
P.O. Box 510663
Milwaukee, WI
53203

CONSULTANTS:

COPYRIGHT 2016, CONTINUUM ARCHITECTS + PLANNERS S.C.

15TH & NORTH HOUSING DEVELOPMENT

NORTH AVENUE BETWEEN 15TH AND 16TH STREETS

SHEET TITLE: **PROPOSED SITE PLAN**

REVISIONS:

SCALE	VARIES
PROJECT NUMBER	150303
SET TYPE	**DPD SUBMITTAL**
DATE ISSUED	**07/29/2016: R8/3/2016**
SHEET NUMBER	**DPD-4**

NOTES:

1. CONTRACTOR SHALL PLACE TYPE D INLET PROTECTION IN EACH OF THE PROPOSED INLETS UPON FINAL INSTALLATION.

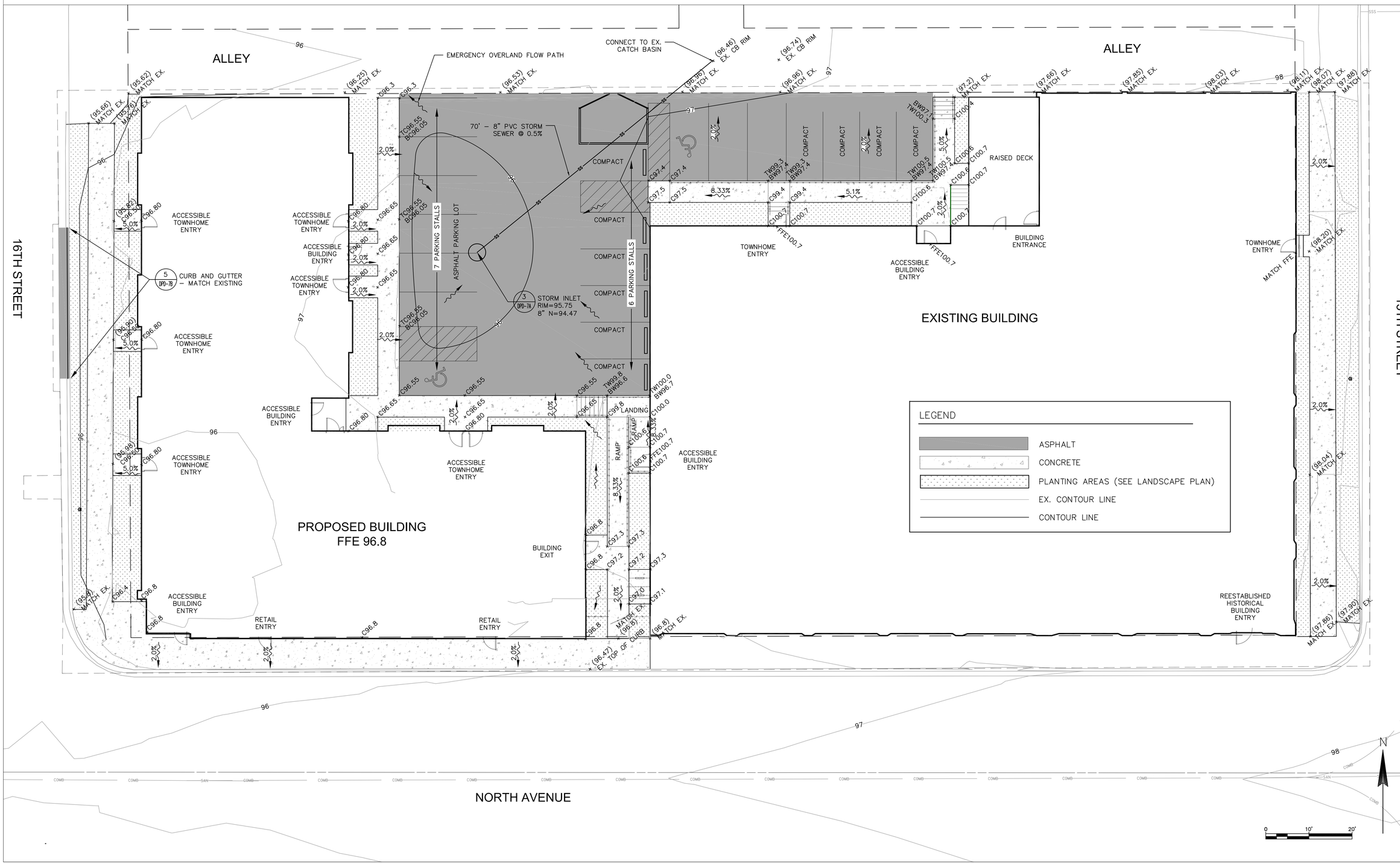

T 414.220.9640
F 414.220.9595

P.O. Box 510663
Milwaukee, WI
53203

CONSULTANTS:

COPYRIGHT 2016, CONTINUUM ARCHITECTS + PLANNERS S.C.

15TH & NORTH HOUSING DEVELOPMENT

NORTH AVENUE BETWEEN 15TH AND 16TH STREETS

SHEET TITLE: **PROPOSED GRADING PLAN**

REVISIONS:

SCALE	VARIES
PROJECT NUMBER	150303
SET TYPE	**DPD SUBMITTAL**
DATE ISSUED	**07/29/2016: R8/3/2016**
SHEET NUMBER	**DPD-5**

UTILITY NOTES:

- THE CONTRACTOR SHALL CONTACT DIGGERS HOTLINE A MINIMUM OF 3 WORKING DAYS PRIOR TO THE START OF CONSTRUCTION.
- STANDARD SPECIFICATIONS: PERFORM ALL WORK IN ACCORDANCE WITH THE PROVISIONS OF:
  - –"STANDARD SPECIFICATIONS FOR SEWER AND WATER CONSTRUCTION IN WISCONSIN" (WSWS) LATEST EDITION
  - –STATE OF WISCONSIN DEPARTMENT OF TRANSPORTATION, DIVISION OF HIGHWAYS STANDARD SPECIFICATIONS FOR ROAD AND BRIDGE CONSTRUCTION" (WISDOT) LATEST EDITION
- CONTRACTOR SHALL OBTAIN A CURRENT COPY OF THE CITY OF KENOSHA'S STANDARD SPECIFICATIONS INCLUDING ALL SUPPLEMENTAL SPECIFICATIONS AND OTHER REVISIONS TO DATE, UNLESS OTHERWISE SPECIFIED IN THE SPECIFICATIONS, PRIOR TO THE START OF CONSTRUCTION.
- WITHIN THE RIGHT–OF–WAY OR UNDERNEATH PAVEMENTS OR BUILDINGS, GRANULAR TRENCH BACKFILL MUST BE USED TO FILL THE TRENCH. ALL OTHER AREAS MAY UTILIZE EXCAVATED TRENCH SPOIL FOR BACKFILL PROVIDING THAT THE MATERIAL IS FREE OF ORGANIC MATERIAL AND STONES LARGER THAN 6" IN DIAMETER.
- A MEANS TO LOCATE BURIED UNDERGROUND EXTERIOR NON METALLIC SEWERS/MAINS AND WATER SERVICES/MAINS MUST BE PROVIDED WITH TRACER WIRE OR OTHER METHODS IN ORDER TO BE LOCATED IN ACCORD WITH THE PROVISIONS OF THESE CODE SECTIONS AS PER 182.0715(2R) OF THE STATUTES.

WATER DISTRIBUTION SYSTEM;

- 6" – PVC AWWA, C–900, CL150, SDR 18 OR DUCTILE IRON AWWA C–151, CLASS–52
- 2" & SMALLER – HIGH DENSITY POLYETHYLENE (HDPE) AWWA C–901, SDR–11 OR COPPER TYPE K.
- WATER LATERAL AND HYDRANT TEES SHALL BE ANCHORED.

STORM SEWER;

- STORM SEWER SPECIFIED AS RCP SHALL BE REINFORCED CONCRETE PIPE CONFORMING TO THE FOLLOWING SPECIFICATIONS:
  - 12" DIA – CLASS V RCP
  - 15" DIA – CLASS IV RCP
  - 18+" DIA – CLASS III RCP
- STORM SEWER SPECIFIED AS HDPE SHALL BE CORRUGATED HDPE, SMOOTH INTERIOR.
- STORM SEWER PIPE: REINFORCED CONCRETE PIPE (RCP) CONFORMING TO ASTM C–76,
- POLYETHYLENE MATERIAL SHALL CONFORM TO ASTM D3350. AN APPROVED RUBBER GASKET JOINT SHALL BE USED FOR EITHER OPTION. JOINTS FOR RCP SHALL CONFORM TO ASTM D–471. JOINTS FOR HDPE SHALL CONFORM TO ASTM F–477.
- ALL PERFORATED DRAIN TILE SHALL BE PLASTIC WITHOUT A FILTER SOCK.

NOTES:

1. CONTRACTOR SHALL PLACE TYPE D INLET PROTECTION IN EACH OF THE PROPOSED INLETS UPON FINAL INSTALLATION.

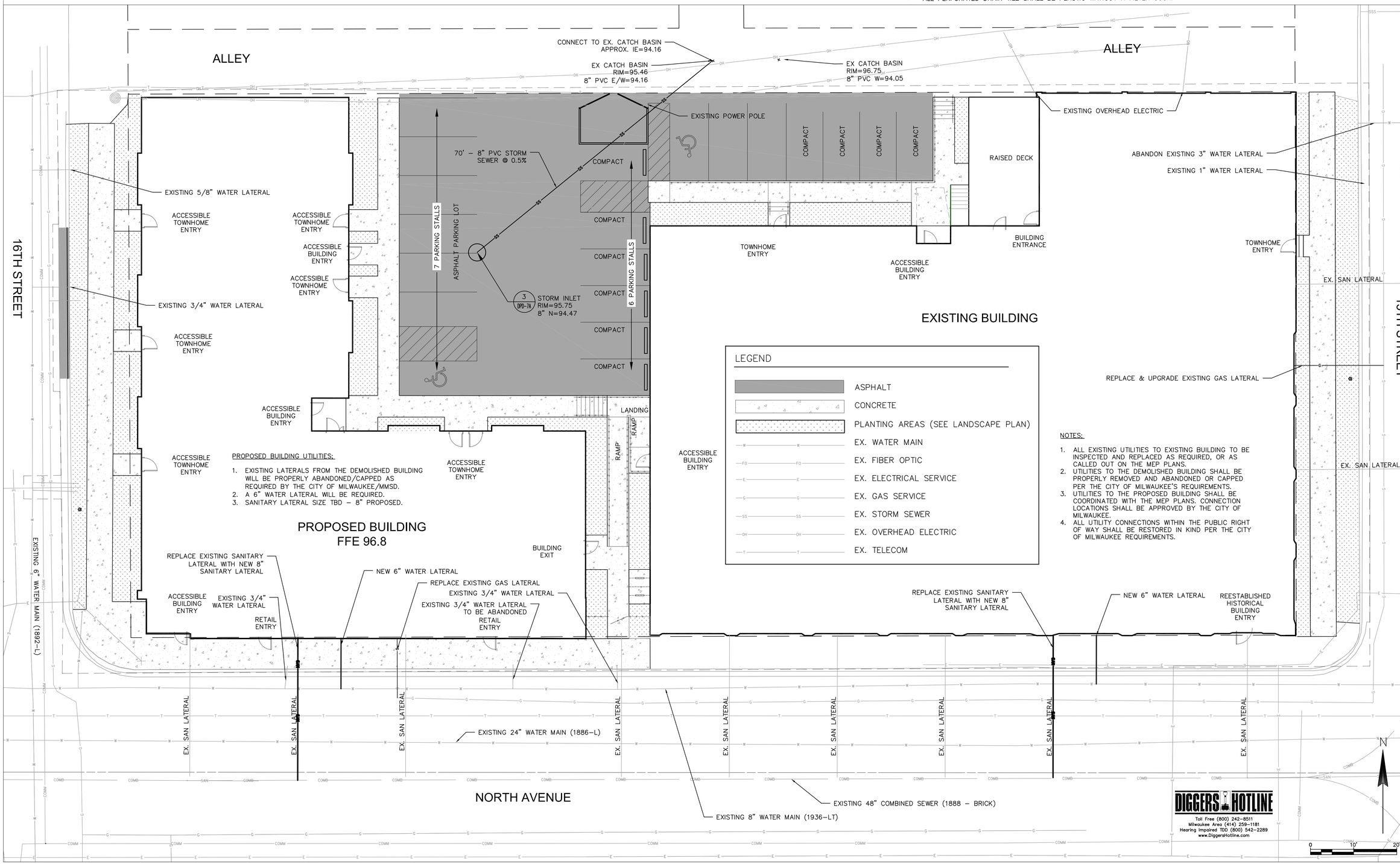

LEGEND

- ASPHALT
- CONCRETE
- PLANTING AREAS (SEE LANDSCAPE PLAN)
- EX. WATER MAIN
- EX. FIBER OPTIC
- EX. ELECTRICAL SERVICE
- EX. GAS SERVICE
- EX. STORM SEWER
- EX. OVERHEAD ELECTRIC
- EX. TELECOM

NOTES:

1. ALL EXISTING UTILITIES TO EXISTING BUILDING TO BE INSPECTED AND REPLACED AS REQUIRED, OR AS CALLED OUT ON THE MEP PLANS.
2. UTILITIES TO THE DEMOLISHED BUILDING SHALL BE PROPERLY REMOVED AND ABANDONED OR CAPPED PER THE CITY OF MILWAUKEE'S REQUIREMENTS.
3. UTILITIES TO THE PROPOSED BUILDING SHALL BE COORDINATED WITH THE MEP PLANS. CONNECTION LOCATIONS SHALL BE APPROVED BY THE CITY OF MILWAUKEE.
4. ALL UTILITY CONNECTIONS WITHIN THE PUBLIC RIGHT OF WAY SHALL BE RESTORED IN KIND PER THE CITY OF MILWAUKEE REQUIREMENTS.

DIGGERS HOTLINE
Toll Free (800) 242–8511
Milwaukee Area (414) 259–1181
Hearing Impaired TDD (800) 542–2289
www.DiggersHotline.com

T 414.220.9640
F 414.220.9595
P.O. Box 510663
Milwaukee, WI
53203

CONSULTANTS:

COPYRIGHT 2016, CONTINUUM ARCHITECTS + PLANNERS S.C.

15TH & NORTH HOUSING DEVELOPMENT

NORTH AVENUE BETWEEN 15TH AND 16TH STREETS

SHEET TITLE: **PROPOSED UTILITY PLAN**

REVISIONS:

SCALE	VARIES
PROJECT NUMBER	150303
SET TYPE	DPD SUBMITTAL
DATE ISSUED	07/29/2016: R8/3/2016
SHEET NUMBER	DPD-6

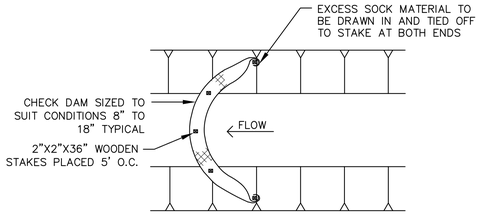

NOTES:
1. SEDIMENT SHOULD BE REMOVED FROM BEHIND CHECK DAM ONCE THE ACCUMULATED HEIGHT HAS REACHED ½ THE HEIGHT OF THE CHECK DAM.
2. CHECK DAM CAN BE DIRECT SEEDED AT THE TIME OF INSTALLATION.

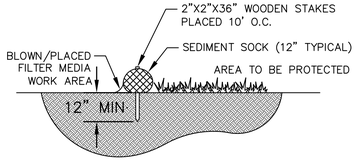

SECTION

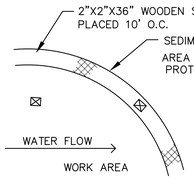

NOTES:
1. FILTER MEDIA FILL TO MEET APPLICATION REQUIREMENTS.
2. COMPOST MATERIAL TO BE DISPERSED ON SITE. AS DETERMINED BY ENGINEER.

PLAN

1 / DPD-7A SEDIMENT SOCK

SCALE: NTS

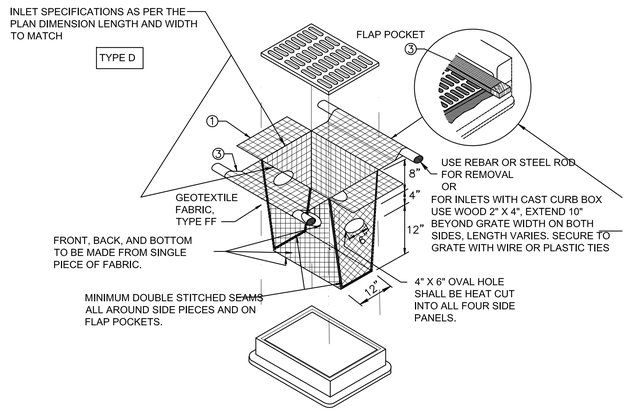

GENERAL NOTES:

INLET PROTECTION DEVICES SHALL BE MAINTAINED OR REPLACED AT THE DIRECTION OF THE ENGINEER.

WHEN REMOVING OR MAINTAINING INLET PROTECTION, CARE SHALL BE TAKEN SO THAT THE SEDIMENT TRAPPED ON THE GEOTEXTILE FABRIC DOES NOT FALL INTO THE INLET. ANY MATERIAL FALLING INTO THE INLET SHALL BE REMOVED IMMEDIATELY

(1) FINISHED SIZE, INCLUDING FLAP POCKETS WHERE REQUIRED, SHALL EXTEND A MINIMUM OF 10" AROUND THE PERIMETER TO FACILITATE MAINTENANCE OR REMOVAL

(2) FOR INSTALLATION WITH CURB BOX, AN ADDITIONAL 18" OF FABRIC IS WRAPPED AROUND THE WOOD AND SECURED WITH STAPLES. THE WOOD SHALL NOT BLOCK THE ENTIRE HEIGHT OF THE CURB BOX OPENING.

(3) FLAP POCKETS SHALL BE LARGE ENOUGH TO ACCEPT WOOD 2x4.

CONSTRUCT PER WDNR TECHNICAL STANDARD 1060.

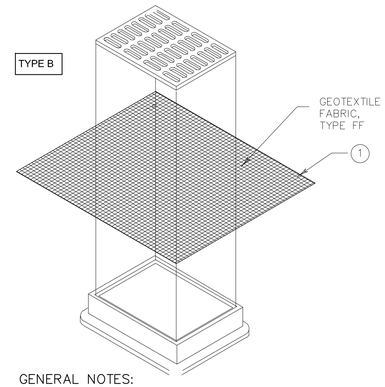

GENERAL NOTES:

CONSTRUCT PER WDNR TECHNICAL STANDARD 1060

INLET PROTECTION DEVICES SHALL BE MAINTAINED OR REPLACED AT THE DIRECTION OF THE ENGINEER.

WHEN REMOVING OR MAINTAINING INLET PROTECTION, CARE SHALL BE TAKEN SO THAT THE SEDIMENT TRAPPED ON THE GEOTEXTILE FABRIC DOES NOT FALL INTO THE INLET. ANY MATERIAL FALLING INTO THE INLET SHALL BE REMOVED IMMEDIATELY

(1) FINISHED SIZE, INCLUDING FLAP POCKETS WHERE REQUIRED, SHALL EXTEND A MINIMUM OF 10" AROUND THE PERIMETER TO FACILITATE MAINTENANCE OR REMOVAL

NOTE:
INLET PROTECTION TYPE D SHALL BE INSTALLED ON ALL INLETS GREATER THAN 30" DEEP. USE INLET PROTECTION TYPE B ON SHALLOWER INLETS.

2 / DPD-7A INLET PROTECTION TYPE B & D

SCALE: NTS

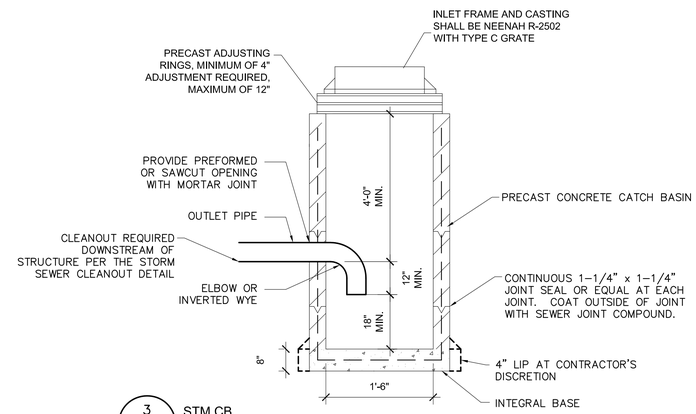

3 / DPD-7A STM CB

NTS

EROSION NOTES:

A. ANY PROPOSED CHANGES TO THE EROSION CONTROL PLAN MUST BE SUBMITTED TO THE CITY FOR APPROVAL AND INDICATED ON THE PLAN.
B. INSTALL WISDOT TYPE B OR D (AS APPLICABLE) INLET PROTECTION AT ALL INLETS SHOWN ON THE PLANS. IF OTHER INLETS ARE FOUND WITHIN THE DRAINAGE AREA. THE CONTRACTOR SHALL PLACE INLET PROTECTION.
C. A TRACKING PAD WILL NOT BE REQUIRED FOR THIS CONSTRUCTION
D. CONSTRUCTION ACCESS TO THE SITE WILL ONLY BE FROM XXXX. CONTRACTOR SHALL ENSURE THAT ACCESS TO THE SITE IS CLEANED UP FROM DIRT AND TRACKED MUD AT THE END OF EACH DAY.
E. CONTRACTOR SHALL POST A COPY OF THE COVERAGE UNDER WPDES GENERAL PERMIT APPROVAL AT A CONSPICUOUS LOCATION ON THE PROJECT SITE FOR AT LEAST FIVE DAYS PRIOR TO CONSTRUCTION, AND REMAINING AT LEAST FIVE DAYS AFTER CONSTRUCTION. CONTRACTOR MUST ALSO HAVE A COPY OF THE PERMIT AND APPROVED PLAN AVAILABLE AT THE PROJECT SITE AT ALL TIMES UNTIL THE PROJECT IS COMPLETE.
F. CONTRACTOR SHALL EMPLOY EROSION CONTROL METHODS AS SHOWN AND SPECIFIED IN THE WISCONSIN DEPARTMENT OF NATURAL RESOURCES CONSTRUCTION SITE TECHNICAL STANDARDS AND THE WISDOT EROSION CONTROL PRODUCT ACCEPTABILITY LISTS (PAL).
G. ALL EROSION CONTROL MEASURES SHALL BE ADJUSTED TO MEET FIELD CONDITIONS AT THE TIME OF CONSTRUCTION AND SHALL BE INSTALLED PRIOR TO ANY GRADING OR DISTURBANCE OF EXISTING SURFACE MATERIAL ON THE SITE.
H. ALL EROSION AND SEDIMENT CONTROL MEASURES WILL BE CHECKED FOR STABILITY AND OPERATION AFTER A RAINFALL OF 0.5 INCHES OR MORE BUT NOT LESS THAN ONCE EVERY WEEK. ANY NEEDED REPAIRS WILL BE MADE IMMEDIATELY. WRITTEN REPORTS WILL BE KEPT OF ALL EROSION AND SEDIMENT CONTROL INSPECTIONS AS REQUIRED BY THE WISCONSIN DEPARTMENT OF NATURAL RESOURCES (WDNR).
I. SILT FENCE/SEDIMENT SOCK SHALL BE INSTALLED IN THE LOCATIONS SHOWN ON THE CONSTRUCTION PLANS PER DETAILS. SEDIMENT DEPOSITS WILL BE REMOVED FROM BEHIND THE SILT FENCE/SEDIMENT SOCK WHEN DEPOSITS REACH A DEPTH OF 6 INCHES. THE SILT FENCE/SEDIMENT SOCK WILL BE REPAIRED OR REPLACED AS NECESSARY TO MAINTAIN A BARRIER.
J. EROSION CONTROL MEASURES MUST BE IN PLACE AT THE END OF EACH WORK DAY.
K. ALL OFF-SITE SEDIMENT DEPOSITS OCCURRING AS A RESULT OF CONSTRUCTION WORK OR A STORM EVENT SHALL BE CLEANED UP BY THE END OF EACH DAY. FLUSHING SHALL NOT BE ALLOWED.
L. WHERE CONSTRUCTION ACTIVITIES HAVE PERMANENTLY CEASED OR HAVE BEEN TEMPORARILY SUSPENDED FOR MORE THAN SEVEN DAYS, OR WHEN FINAL GRADES ARE REACHED IN ANY PORTION OF THE SITE, STABILIZATION SHALL BE IMPLEMENTED WITHIN SEVEN DAYS. TEMPORARY STABILIZATION PRACTICES SUCH AS MULCH/TACKIFIER, EROSION MAT, OR WISDOT TYPE B SOIL STABILIZER SHALL BE APPLIED TO THE SOIL SURFACE WHEN THE SITE IS NOT READY FOR PERMANENT RESTORATION. WHEN STABILIZATION IS NOT POSSIBLE DUE TO SNOW COVER, STABILIZATION MEASURES SHALL BE INITIATED AS SOON AS POSSIBLE.
M. STORM WATER AND GROUND WATER PUMPED FROM EXCAVATIONS AND/OR DEWATERING WELLS SHALL BE DISPOSED OF IN ACCORDANCE WITH THE WISCONSIN STATUTES. SEDIMENT BASINS, SEDIMENT TRAPS AND/OR THE USE OF POLYMERS TO CONTROL SEDIMENT SHALL BE UTILIZED AND MEET THE REQUIREMENTS OF THE WISCONSIN WDNR TECHNICAL STANDARDS.
N. ALL TEMPORARY EROSION AND SEDIMENT CONTROL MEASURES SHALL BE REMOVED WITHIN 30 DAYS AFTER FINAL SITE STABILIZATION IS ACHIEVED OR AFTER THE TEMPORARY MEASURES ARE NO LONGER NEEDED.
O. THIS PLAN SHOWS NEW FINISHED GRADES. FOR ALL PAVEMENT AREAS, SUBTRACT THICKNESS OF PAVEMENT AND BASE COURSE SPECIFIED.
P. ALL DIMENSIONS SHOWN ARE TO DECIMAL FEET AND MEASURED TO EDGE OF PAVEMENT, UNLESS SPECIFIED OTHERWISE. PRIOR TO START OF CONSTRUCTION, THE CONTRACTOR SHALL FIELD VERIFY ALL DIMENSIONS AND REPORT ANY DISCREPANCIES TO THE OWNERS REPRESENTATIVE.
Q. CONTRACTOR TO PROVIDE UPDATED CONSTRUCTION SCHEDULE ON BI-WEEKLY BASIS.
R. PROVIDE TRAFFIC CONTROL DURING CONSTRUCTION AS REQUIRED TO MAINTAIN SAFE CONDITIONS FOR WORKERS AND THE PUBLIC.
S. CONTRACTOR TO INSTALL AND USE CONCRETE WASH-OUT AREAS AS NEEDED IN AREAS DESIGNATED ON THE PLAN
T. IF DEWATERING IS NECESSARY, MAXIMUM OUTPUT MAY NOT EXCEED 70 GPM WITHOUT A PERMIT.

*SEEDING AND STABILIZATION INFORMATION & DEADLINES ARE AS FOLLOWS:
-CONTRACTOR TO USE WISDOT MIX #40 AT A RATE OF 3.0 LBS/1000 SF
-CONTRACTOR TO USE ANNUAL SEEDING AT A RATE OF 2.0 LBS/1000 SF
-CONTRACTOR TO APPLY FERTILIZER AT A RATE OF 2 LBS/1000 SF
AFTER SEPTEMBER 15TH, A COOL WEATHER SEEDING COVER CROP MUST BE APPLIED (I.E. OATS)
AFTER OCTOBER 15TH, A DORMANT SEEDING COVER CROP MUST BE APPLIED
(I.E. WINTER WHEAT)
AFTER NOVEMBER 15TH, A DORMANT SEEDING MUST BE APPLIED WITH AN ACCEPTABLE SOIL STABILIZER. (POLYACRYLIMIDE)

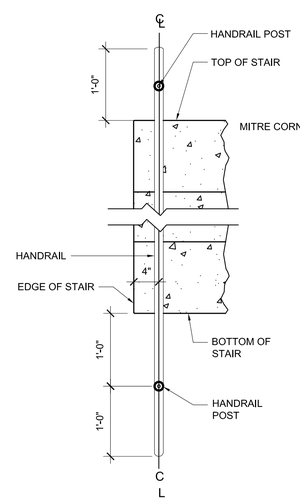

PLAN

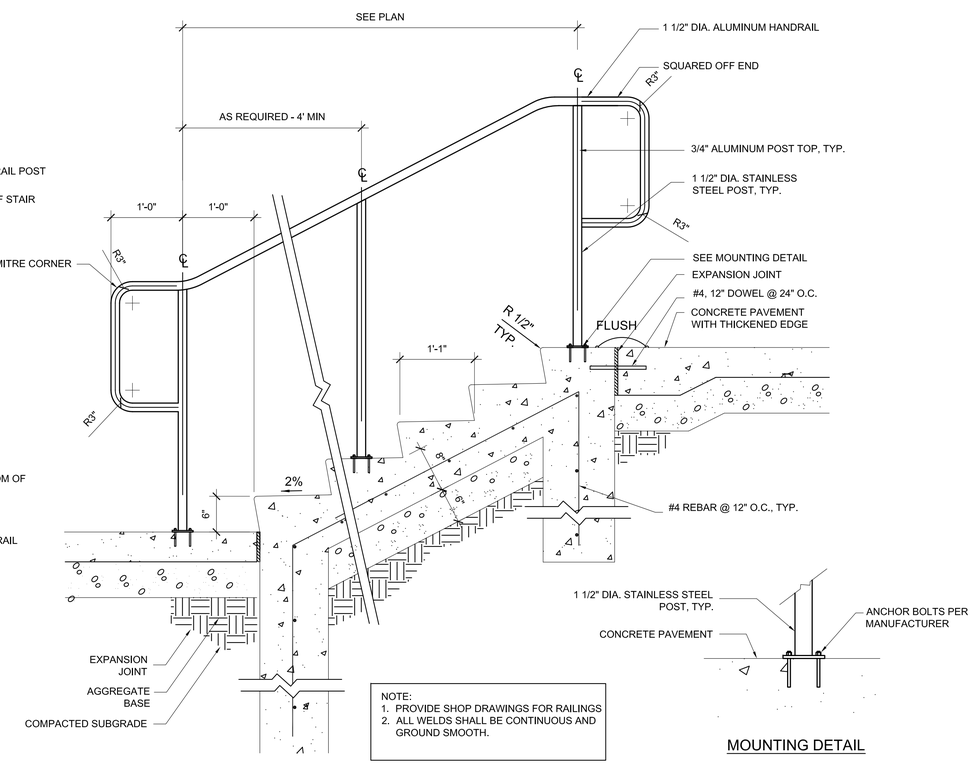

NOTE:
1. PROVIDE SHOP DRAWINGS FOR RAILINGS
2. ALL WELDS SHALL BE CONTINUOUS AND GROUND SMOOTH.

MOUNTING DETAIL

4 / DPD-7A STAIRS / RAILING

NTS

T 414.220.9640
F 414.220.9595
P.O. Box 510663
Milwaukee, WI
53203

CONSULTANTS:

COPYRIGHT 2016, CONTINUUM ARCHITECTS + PLANNERS S.C.

15TH & NORTH HOUSING DEVELOPMENT

NORTH AVENUE BETWEEN 15TH AND 16TH STREETS

SHEET TITLE: **PROPOSED SITE DETAILS**

REVISIONS:

SCALE	VARIES
PROJECT NUMBER	150303
SET TYPE	**DPD SUBMITTAL**
DATE ISSUED	**07/29/2016**
SHEET NUMBER	**DPD-7A**

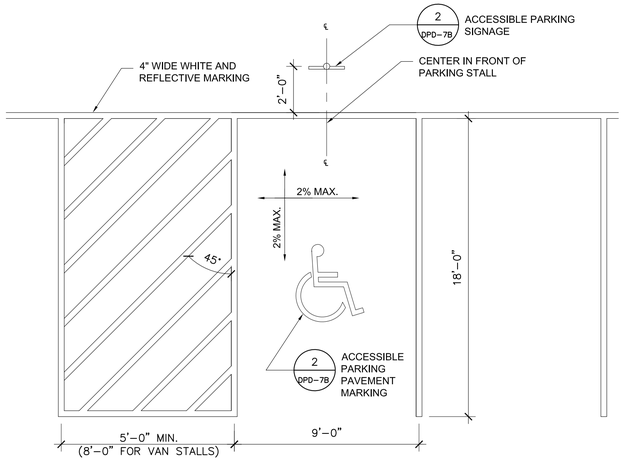

1 DPD-7B ACCESSIBLE PARKING

NTS

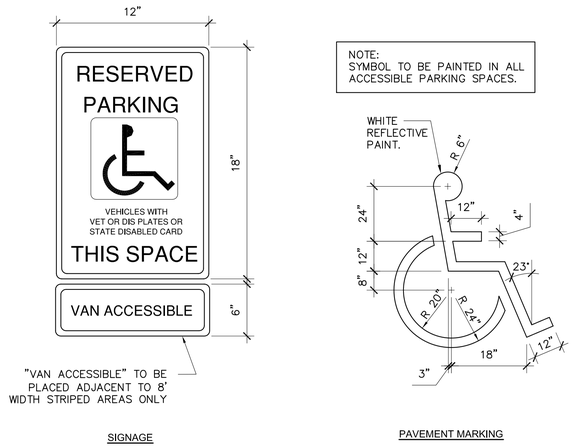

2 DPD-7B ACCESSIBLE PARKING SIGNAGE AND PAVEMENT MARKING

NTS

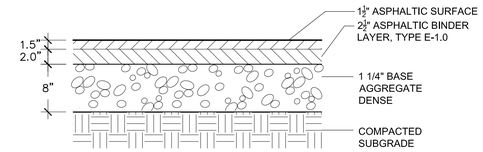

3 DPD-7B ASPHALT PAVEMENT

NTS

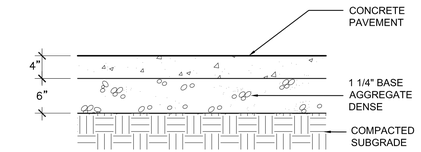

NOTES:
1. STANDARD COLOR CONCRETE
2. MEDIUM BROOM FINISH, PERP. TO DIR. OF TRAVEL
3. PROVIDE EXPANSION JOINTS 30' ALL WAYS, MINIMUM

4 DPD-7B CONCRETE PAVEMENT

NTS

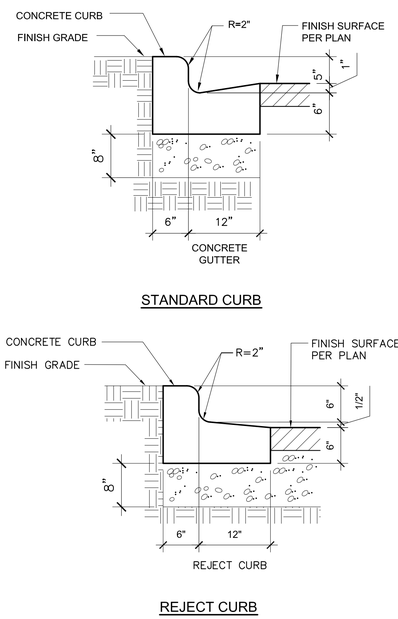

5 DPD-7B CONCRETE CURB & GUTTER 18-INCH

SCALE NTS

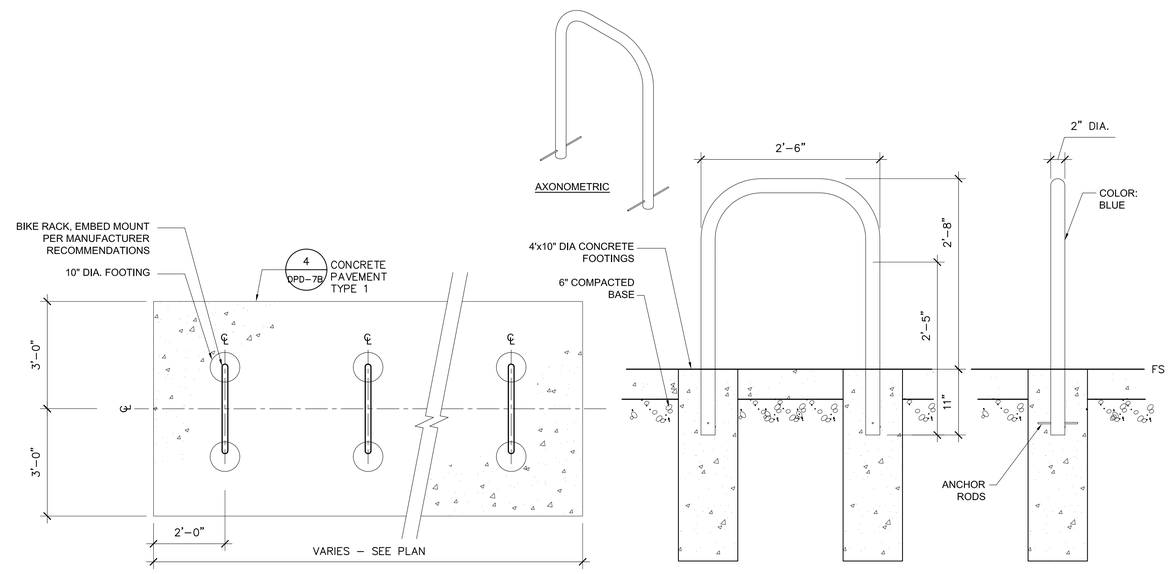

6 DPD-7B BICYCLE PARKING

NTS

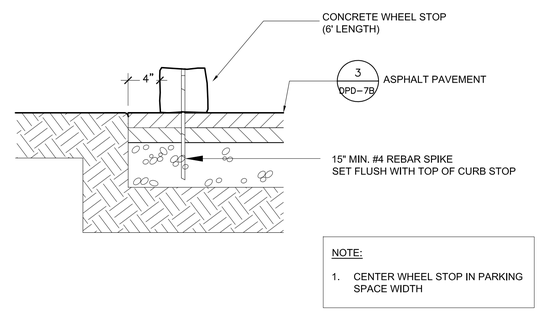

NOTE:
1. CENTER WHEEL STOP IN PARKING SPACE WIDTH

7 DPD-7B WHEEL STOP

NTS

T 414.220.9640
F 414.220.9595

P.O. Box 510663
Milwaukee, WI
53203

CONSULTANTS:

COPYRIGHT 2016, CONTINUUM ARCHITECTS + PLANNERS S.C.

15TH & NORTH HOUSING DEVELOPMENT

NORTH AVENUE BETWEEN 15TH AND 16TH STREETS

SHEET TITLE: **PROPOSED SITE DETAILS**

REVISIONS:

SCALE	VARIES
PROJECT NUMBER	150303
SET TYPE	**DPD SUBMITTAL**
DATE ISSUED	**07/29/2016**
SHEET NUMBER	**DPD-7B**

STREET VIEW - NORTH AVENUE AT 15TH STREET

STREET VIEW - NORTH AVENUE AT 16TH STREET

BIRDSEYE VIEW - TOWARD THE NORTHEAST

BIRDSEYE VIEW - TOWARD THE SOUTHWEST

BIRDSEYE VIEW - TOWARD THE NORTHWEST

BIRDSEYE VEIW - TOWARD THE SOUTHEAST

T 414.220.9640
F 414.220.9595

P.O. Box 510663
Milwaukee, WI
53203

CONSULTANTS:

15TH + NORTH APARTMENTS

1500 WEST NORTH AVENUE, MILWAUKEE, WI

SHEET TITLE:
PROPOSED DEVELOPMENT EXTERIOR IMAGES

REVISIONS:

SCALE	VARIES
PROJECT NUMBER	150303
SET TYPE	DPD SUBMITTAL
DATE ISSUED	07/29/2016
SHEET NUMBER	DPD-8A1

COPYRIGHT 2016, CONTINUUM ARCHITECTS + PLANNERS S.C.

ENLARGED STREET VIEW - NORTH AVENUE AT 16TH STREET

ENLARGED STREET VIEW - NORTH AVENUE AT 15TH STREET

T 414.220.9640
F 414.220.9595

P.O. Box 510663
Milwaukee, WI
53203

CONSULTANTS:

COPYRIGHT 2016, CONTINUUM ARCHITECTS + PLANNERS S.C.

15TH + NORTH APARTMENTS

1500 WEST NORTH AVENUE, MILWAUKEE, WI

SHEET TITLE:
PROPOSED DEVELOPMENT EXTERIOR IMAGES

REVISIONS:

SCALE	VARIES
PROJECT NUMBER	150303
SET TYPE	DPD SUBMITTAL
DATE ISSUED	07/29/2016
SHEET NUMBER	DPD-8A2

2 SOUTH ELEVATION (NORTH AVE)

Scale: 1/16" = 1'-0"

0' 4' 8' 16' 24'

1 NORTH ELEVATION

Scale: 1/16" = 1'-0"

0' 4' 8' 16' 24'

T 414.220.9640
F 414.220.9595

P.O. Box 510663
Milwaukee, WI
53203

CONSULTANTS:

COPYRIGHT 2016, CONTINUUM ARCHITECTS + PLANNERS S.C.

15TH & NORTH HOUSING DEVELOPMENT

1500-1504, 1524, & 1528-1534 WEST NORTH AVENUE, MILWAUKEE, WISCONSIN

SHEET TITLE:
PROPOSED DEVELOPMENT EXTERIOR ELEVATIONS

REVISIONS:

SCALE	VARIES
PROJECT NUMBER	150303
SET TYPE	DPD SUBMITTAL
DATE ISSUED	07/29/2016
SHEET NUMBER	DPD-8B

2 SOUTH ELEVATION

Scale: 1/8" = 1'-0"

0' 2' 4' 8' 12'

1 SOUTH ELEVATION

Scale: 1/8" = 1'-0"

0' 2' 4' 8' 12'

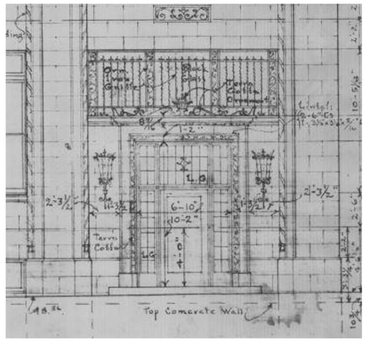

ORIGINAL HISTORICAL BUILDING ENTRANCE TO BE REESTABLISHED

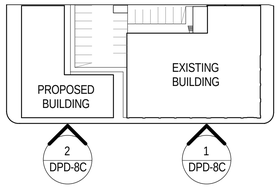

KEY PLAN

SCALE: 1" = 80'-0"

T 414.220.9640
F 414.220.9595

P.O. Box 510663
Milwaukee, WI
53203

CONSULTANTS:

COPYRIGHT 2016, CONTINUUM ARCHITECTS + PLANNERS S.C.

15TH & NORTH HOUSING DEVELOPMENT

1500-1504, 1524, & 1528-1534 WEST NORTH AVENUE, MILWAUKEE, WISCONSIN

SHEET TITLE: PROPOSED BUILDING ELEVATIONS - SOUTH

REVISIONS:

SCALE	VARIES
PROJECT NUMBER	150303
SET TYPE	DPD SUBMITTAL
DATE ISSUED	07/29/2016
SHEET NUMBER	DPD-8C

2 EAST ELEVATION

Scale: 1/8" = 1'-0"

0' 2' 4' 8' 12'

1 EAST ELEVATION

Scale: 1/8" = 1'-0"

0' 2' 4' 8' 12'

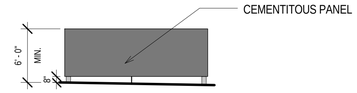

6 DUMPSTER ENCLOSURE - SOUTH

Scale: 1/8" = 1'-0"

0' 2' 4' 8' 12'

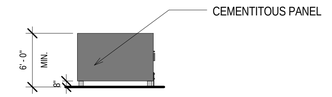

5 DUMPSTER ENCLOSURE - EAST

Scale: 1/8" = 1'-0"

0' 2' 4' 8' 12'

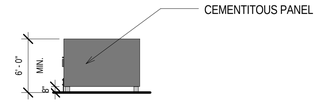

4 DUMPSTER ENCLOSURE - WEST

Scale: 1/8" = 1'-0"

0' 2' 4' 8' 12'

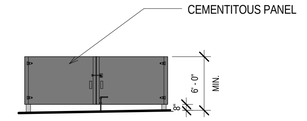

3 DUMPSTER ENCLOSURE - NORTH

Scale: 1/8" = 1'-0"

0' 2' 4' 8' 12'

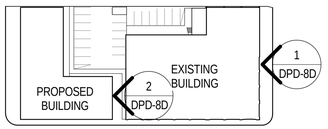

KEY PLAN

SCALE: 1" = 80'-0"

T 414.220.9640
F 414.220.9595

P.O. Box 510663
Milwaukee, WI
53203

CONSULTANTS:

COPYRIGHT 2016, CONTINUUM ARCHITECTS + PLANNERS S.C.

15TH & NORTH HOUSING DEVELOPMENT

1500-1504, 1524, & 1528-1534 WEST NORTH AVENUE, MILWAUKEE, WISCONSIN

SHEET TITLE: PROPOSED BUILDING ELEVATIONS - EAST

REVISIONS:

SCALE	VARIES
PROJECT NUMBER	150303
SET TYPE	DPD SUBMITTAL
DATE ISSUED	07/29/2016
SHEET NUMBER	DPD-8D

2 WEST ELEVATION

Scale: 1/8" = 1'-0"

0' 2' 4' 8' 12'

1 WEST ELEVATION

Scale: 1/8" = 1'-0"

0' 2' 4' 8' 12'

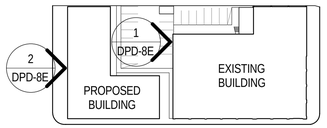

KEY PLAN

SCALE: 1" = 80'-0"

T 414.220.9640
F 414.220.9595

P.O. Box 510663
Milwaukee, WI
53203

CONSULTANTS:

COPYRIGHT 2016, CONTINUUM ARCHITECTS + PLANNERS S.C.

15TH & NORTH HOUSING DEVELOPMENT

1500-1504, 1524, & 1528-1534 WEST NORTH AVENUE, MILWAUKEE, WISCONSIN

SHEET TITLE: PROPOSED BUILDING ELEVATIONS - WEST

REVISIONS:

SCALE	VARIES
PROJECT NUMBER	150303
SET TYPE	DPD SUBMITTAL
DATE ISSUED	07/29/2016
SHEET NUMBER	DPD-8E

2 NORTH ELEVATION

Scale: 1/8" = 1'-0"

0' 2' 4' 8' 12'

1 NORTH ELEVATION

Scale: 1/8" = 1'-0"

0' 2' 4' 8' 12'

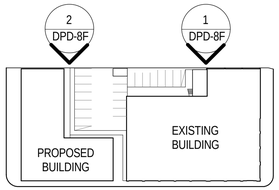

KEY PLAN

SCALE: 1" = 80'-0"

T 414.220.9640
F 414.220.9595

P.O. Box 510663
Milwaukee, WI
53203

CONSULTANTS:

COPYRIGHT 2016, CONTINUUM ARCHITECTS + PLANNERS S.C.

15TH & NORTH HOUSING DEVELOPMENT

1500-1504, 1524, & 1528-1534 WEST NORTH AVENUE, MILWAUKEE, WISCONSIN

SHEET TITLE:
PROPOSED BUILDING ELEVATIONS - NORTH

REVISIONS:

SCALE	VARIES
PROJECT NUMBER	150303
SET TYPE	DPD SUBMITTAL
DATE ISSUED	07/29/2016
SHEET NUMBER	DPD-8F

NOTE: SEE DPD PROPOSED EXTERIOR DEVELOPMENT IMAGES AND PROPOSED ELEVATION SHEETS FOR FURTHER ILLUSTRATION OF SIGNAGE PLACEMENT

- FONT: ANY FONT, TREBUCHET BOLD SHOWN FOR ILLUSTRATION
- FACE PAINTED, COLOR TO BE OWNER APPROVED
- 3" 0.040 ALUMINUM RETURNS
- 0.063 ALUMINUM FACES
- 1/8" CLEAR LEXAN BACKS

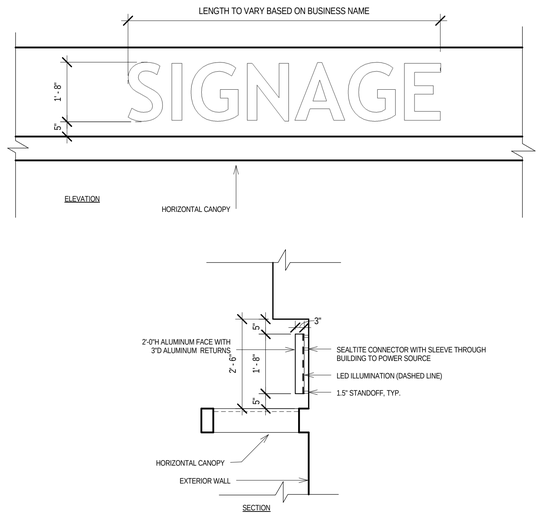

2 COMMERCIAL SIGNAGE AT NEW BUILDING

Scale: 1/2" = 1'-0"

0' 6" 1' 2' 3'

NOTE: SEE DPD PROPOSED EXTERIOR DEVELOPMENT IMAGES AND PROPOSED ELEVATION SHEETS FOR FURTHER ILLUSTRATION OF SIGNAGE PLACEMENT

- RESIDENTIAL DEVELOPMENT NAME TO BE READ HORIZONTALLY APPLIED TO BOTH SIDES OF THE VERTICAL FIN AT THE NEW BUILDING
- FONT: TREBUCHET BOLD
- FACE: SILVER
- 2" 0.040 ALUMINUM RETURNS
- 0.063 ALUMINUM FACES
- 1/8" CLEAR LEXAN BACKS

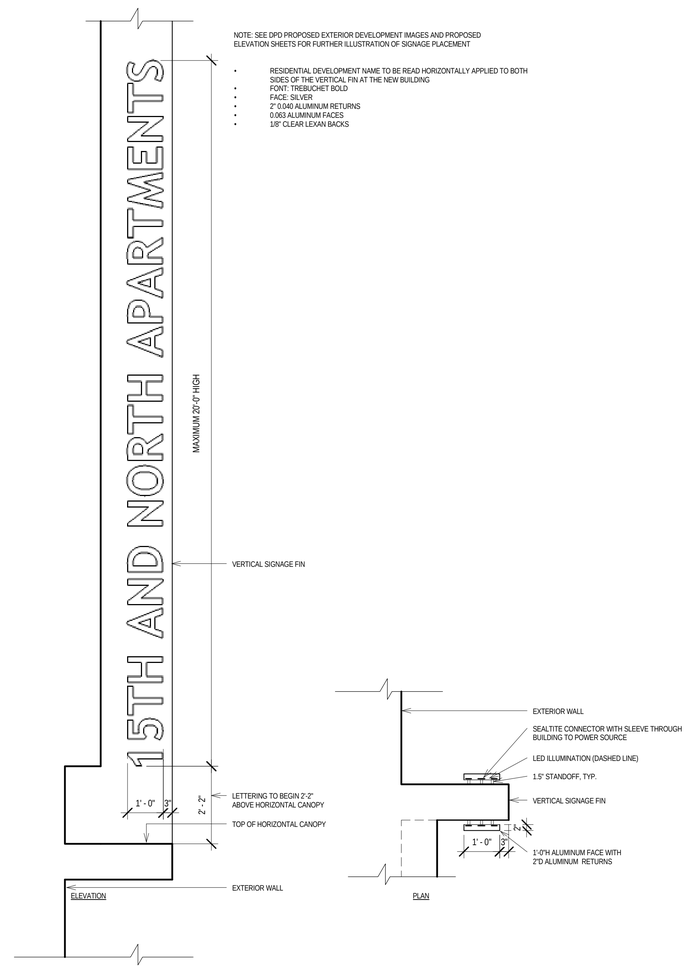

1 RESIDENTIAL SIGNAGE AT NEW BUILDING

Scale: 1/2" = 1'-0"

0' 6" 1' 2' 3'

T 414.220.9640
F 414.220.9595

P.O. Box 510663
Milwaukee, WI
53203

CONSULTANTS:

COPYRIGHT 2016, CONTINUUM ARCHITECTS + PLANNERS S.C.

15TH + NORTH APARTMENTS

1500 WEST NORTH AVENUE, MILWAUKEE, WI

SHEET TITLE: PROPOSED SIGNAGE

REVISIONS:

SCALE	VARIES
PROJECT NUMBER	150303
SET TYPE	DPD SUBMITTAL
DATE ISSUED	07/29/2016
SHEET NUMBER	DPD-9