THE PROFESSIONAL CENTER

THE BREWERY DEVELOPMENT
WEST JUNEAU AVE. & 11TH STREET
MILWAUKEE, WISCONSIN

GORMAN & COMPANY, INC
REAL ESTATE DEVELOPMENT & MANAGEMENT
200 N. MAIN STREET
OREGON, WI 53575

Developer / Builder	Architect	Structural Engineer	Civil Engineer	Landscape Designer
Gorman & Company, Inc. 200 North Main Street Oregon, WI 53575 Contact: Phone: (608) 835 - 3900 Fax: (608) 835 - 3922 E-mail:	Gorman & Company, Inc. 200 North Main Street Oregon, WI 53575 Contact: Ben Marshall Phone: (608) 835 - 3900 Fax: (608) 835 - 3922 E-mail: bmarshall@gormanusa.com	Pierce Engineers, Inc. 10 West Mifflin Street Madison, WI 53703 Contact: Kurt D. Frey Ph: (608) 256 - 7304 Fax: (608) 256 - 7306 E-mail: kdf@pierceengineers.com		

CONSULTANT

KNOTHE & BRUCE ARCHITECTS

ABBREVIATIONS

A.B.	ANCHOR BOLT	INSUL.	INSULATION
ACCOUST.	ACOUSTICAL	INV.	INVERT
A/C.	AIR CONDITIONER	JT.	JOINT
ADJ.	ADJACENT	LAV.	LAVATORY
AFF.	ABOVE FINISH FLOOR	MATL.	MATERIAL
ALT.	ALTERNATE	MC	MEDICINE CABINET
ALUM.	ALUMINUM	MECH.	MECHANICAL
APPROX.	APPROXIMATE	MH.	MANHOLE
BD.	BOARD	M.O.	MASONRY OPENING
BIT.	BITUMINOUS	M.R.	MOISTURE RESISTANT
BLDG.	BUILDING	MTL.	METAL
BLK.	BLOCK	N.I.C.	NOT IN CONTRACT
BLKG.	BLOCKING	N.T.S.	NOT TO SCALE
BM.	BEAM	O.C.	ON CENTER
BRG.	BEARING	OPP.	OPPOSITE HAND
BUR.	BUILT-UP ROOF	P.C.	PRECAST CONCRETE
C.J.	CONTROL JOINT	P.D.F.	POWER DRIVEN FASTENER
CLG.	CEILING	PLBG.	PLUMBING
CMU.	CONCRETE MASONRY UNIT	P.T.	PRESSURE TREATED
COL.	COLUMN	PLWD.	PLYWOOD
CONT.	CONTINUOUS	PNT.	PAINT(ED)
CPT.	CARPET	P.S.F.	POUNDS PER SQUARE FOOT
C.T.	CERAMIC TILE	P.S.I.	POUNDS PER SQUARE INCH
DBL	DOUBLE	Q.T.	QUARRY TILE
D.F.	DRINKING FOUNTAIN	R.D.	ROOF DRAIN
DIA.	DIAMETER	REINF.	REINFORCING OR REINFORCED
DIM.	DIMENSION		
D.S.	DOWN SPOUT	REQ'D.	REQUIRED
D.T.	DRAIN TILE	R.O.	ROUGH OPENING
ELEC.	ELECTRIC	SIM.	SIMILAR
EJ	EXPANSION JOINT	S.M.	SHEET METAL
EL.	ELEVATION	SPECS.	SPECIFICATIONS
EQ.	EQUAL	SQ.	SQUARE
E.W.C.	ELECTRIC WATER COOLER	SQ. FT.	SQUARE FOOT
EXIST.	EXISTING	STD.	STANDARD
EXP.	EXPANSION	STL.	STEEL
EXT.	EXTERIOR	T&G	TONGUE AND GROOVE
F.E.	FIRE EXTINGUISHER	T.O.B.	TOP OF BEAM
F.D.	FLOOR DRAIN	T.O.F.	TOP OF FOOTING
FDN.	FOUNDATION	T.O.W.	TOP OF WALL
FIN.	FINISHED	THRU.	THROUGH
FLR.	FLOOR	TYP.	TYPICAL
F.O.C.	FACE OF CONCRETE	UNEXC.	UNEXCAVATED
F.O.M.	FACE OF MASONRY	U.N.O.	UNLESS NOTED OTHERWISE
F.O.S.	FACE OF STUD	U.V.	UNIT VENTILATOR
F.R.P.	FIBERGLASS REINFORCED PANEL	V.C.T.	VINYL COMPOSITION TILE
		VERT.	VERTICAL
FT.	FOOT OR FEET	VNL.	SHEET VINYL FLOORING
FTG.	FOOTING	V.W.C.	VINYL WALL COVERING
G.C.	GENERAL CONTRACTOR	WD.	WOOD
G.W.B.	GYPSUM WALL BOARD	W.H.	WATER HEATER
GYP.	GYPSUM	W/	WITH
H.B.	HOSE BIB	W/O	WITHOUT
HC.	HANDICAP	WT	WEIGHT
HGT.	HEIGHT	W.W.F.	WIRE WELDED FABRIC
H.M.	HOLLOW METAL		
HORIZ.	HORIZONTAL		
HTG.	HEATING		
HVAC	HEATING/VENTILATION/ AIR CONDITIONING		
IBC	INTERNATIONAL BUILDING CODE		
IECC	INTERNATIONAL ENERGY CONSERVATION CODE		
IFC	INTERNATIONAL FIRE CODE		
IMC	INTERNATIONAL MECHANICAL CODE		

SYMBOLS

A / 4 — FULL BUILDING SECTION

A / 4 — PARTIAL SECTION CUT

1 / A-31 — DETAIL MARK

5 — WALL TYPE IDENTIFICATION

30" x 48" HC. CLEAR FLOOR SPACE

60" HC. TURNING CIRCLE

FLOOR PLANS

- FIRE ALARM PULL STATION
- FIRE EXTINGUISHER
- SMOKE DETECTOR
- EXIT SIGN
- FLOOR DRAIN
- SLAB ELEVATION

FRAMING PLANS

- POINT LOAD
- JL — JOIST HANGER
- BEARING WALL
- SHEAR WALL

BUILDING SUMMARY

ADDRESS: JUNEAU AND 11TH STREET - MILWAUKEE, WI
WORK DESCRIPTION: 5 STORY OFFICE BUILDING

APPLICABLE CODES AND STANDARDS:
CITY OF MILWAUKEE ZONING ORDINANCES
DEVELOPMENT INCENTIVE ZONE GUIDELINES - THE BREWERY PROJECT
COMM 61-66 WISCONSIN COMMERCIAL BUILDING CODE
INTERNATIONAL BUILDING CODE (IBC) 2009
NATIONAL FIRE PROTECTION ASSOCIATION (NFPA) 13
ICC/ANSI A117.1-2003

BUILDING SUMMARY:
BASEMENT PARKING: LOW HAZARD STORAGE, GROUP S-2, 1A CONSTRUCTION, NON-COMBUSTABLE, SPRINKLERED PER NFPA 13
FIRST FLOOR PARKING: LOW HAZARD STORAGE, GROUP S-2, 1A CONSTRUCTION, NON-COMBUSTABLE, SPRINKLERED PER NFPA 13
BUSINESS OCCUPANCY ABOVE PARKING: SEPARATED OCCUPANCIES WITH 3 HOUR HORIZONTAL ASSEMBLY
OFFICE SPACE (FLOORS 1-5): BUSINESS, GROUP B, IIIB CONSTRUCTION, METAL FRAMED, SPRINKLERED PER NFPA 13

BUILDING HEIGHTS AND AREAS:
UNMODIFIED ALLOWABLE HEIGHT = 3 STORIES, 55'-0"
MODIFIED ALLOWABLE HEIGHT = 4 STORIES ABOVE HORIZONTAL ASSEMBLY, 75'-0" MAX.
BUILDING HEIGHT = 74'-0"
UNMODIFIED ALLOWABLE AREA = 19,000 SQ. FT
MODIFIED ALLOWABLE AREA = 57,000 SQ. FT
PROPOSED LARGEST FLOOR AREA = 16,961 SQ. FT.

SHEET INDEX

DESIGN LOADS

SITE LOCATOR MAP

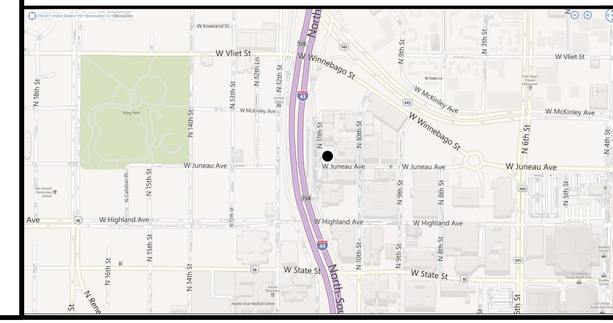

THE PROFESSIONAL CENTER
THE BREWERY DEVELOPMENT
WEST JUNEAU AVE.
MILWAUKEE, WISCONSIN

Project No. 1211
Plot Date:
Drawn by: KBA

Issue dates:
2012.05.17 PRELIMINARY PRICING

Sheet Title
Title Sheet

Sheet No.
T-1.1

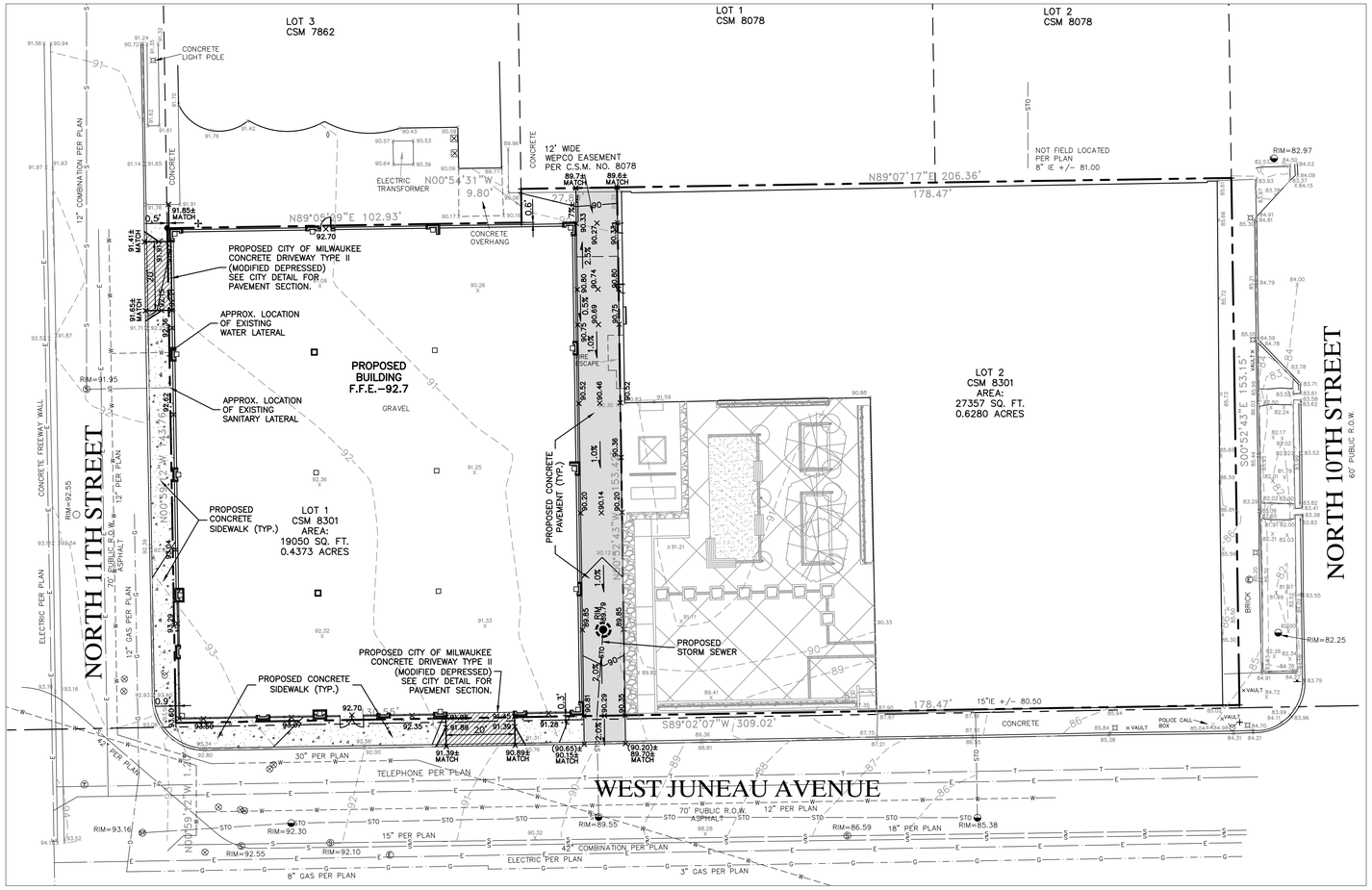

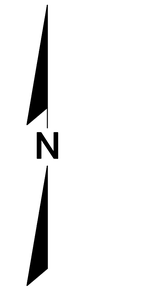

GRAPHIC SCALE

10 0 5 10 20 40

(IN FEET)
1 inch = 20 ft.

NOTES:

1. ALL DIMENSIONS ARE SHOWN TO FACE OF CURB, FACE OF WALL OR FACE OF BUILDING UNLESS OTHERWISE NOTED.

2. ALL PROPOSED ACCESSIBLE ROUTES ARE PER 2010 ADA STANDARDS OR ACCESSIBLE DESIGN.

3. ALL PROPOSED RETAINING WALLS SHALL BE DESIGN/BUILD BY GENERAL CONTRACTOR.

4. ALL PIPE LENGTHS ARE TO CENTER OF PROPOSED STRUCTURES.

LEGEND

PROPOSED	EXISTING	
	( )	INDICATES RECORDED DIMENSION WHERE DIFFERENT FROM ACTUAL MEASUREMENT
	OR	SECTION OR 1/4 SECTION CORNER AS DESCRIBED
		1" DIA. IRON PIPE FOUND (UNLESS OTHERWISE NOTED)
		1" DIA. IRON PIPE, 18" LONG-SET (UNLESS OTHERWISE NOTED)
		BOLLARD
		SOIL BORING/MONITORING WELL
		FLAGPOLE
		MAILBOX
		SIGN
		BILLBOARD
		CONTROL BOX
		TRAFFIC SIGNAL
		RAILROAD CROSSING SIGNAL
		CABLE PEDESTAL
		POWER POLE
		GUY POLE
		GUY WIRE
		LIGHT POLE
		SPOT/YARD/PEDESTAL LIGHT
		HANDICAPPED PARKING
		ELECTRIC MANHOLE
		ELECTRIC PEDESTAL
		ELECTRIC METER
		TELEPHONE MANHOLE
		TELEPHONE PEDESTAL
		MARKED FIBER OPTIC
		GAS VALVE
		GAS METER
		GAS WARNING SIGN
		STORM MANHOLE
		ROUND INLET
		SQUARE INLET
		STORM SEWER END SECTION
		SANITARY MANHOLE
		SANITARY CLEANOUT OR SEPTIC VENT
		SANITARY INTERCEPTOR MANHOLE
		MISCELLANEOUS MANHOLE
		WATER VALVE
		HYDRANT
		WATER SERVICE CURB STOP
		WATER MANHOLE
		WELL
		WATER SURFACE
		WETLANDS FLAG
		MARSH
		CONIFEROUS TREE
		DECIDUOUS TREE
		SHRUB
	S	-EDGE OF TREES
S	S	-SANITARY SEWER
STO	STO	-STORM SEWER
W	W	-WATERMAIN
	G	-MARKED GAS MAIN
	E	-MARKED ELECTRIC
	OHW	-OVERHEAD WIRES
	B	-BUREAU ELEC. SERV.
	T	-MARKED TELEPHONE
	TV	-MARKED CABLE TV LINE
	FO	-MARKED FIBER OPTIC
780	780	INDICATES CONTOUR ELEVATION
× 780.55	× 780.55	INDICATES SPOT ELEVATION
× (780.55)		TOP OF CURB SPOT ELEVATION
		PROPOSED CONCRETE DRIVEWAY
		PROPOSED CONCRETE PAVEMENT
		PROPOSED CONCRETE SIDEWALK
		TEMPORARY INLET PROTECTION

R.A.SMITH NATIONAL, INC. ASSUMES NO RESPONSIBILITY FOR DAMAGES, LIABILITY OR COSTS RESULTING FROM CHANGES OR ALTERATIONS MADE TO THIS PLAN WITHOUT THE EXPRESSED WRITTEN CONSENT OF R.A.SMITH NATIONAL.

SPECIFICATIONS

A. GENERAL

1. THE CONTRACTOR SHALL NOTIFY THE OWNER AND THE MUNICIPALITY FORTY- EIGHT (48) HOURS PRIOR TO THE START OF CONSTRUCTION.
2. THE CONTRACTOR SHALL INDEMNIFY THE OWNER, THE ENGINEER, AND THE MUNICIPALITY, THEIR AGENTS, ETC. FROM ALL LIABILITY INVOLVED WITH THE CONSTRUCTION, INSTALLATION, AND TESTING OF THE WORK ON THIS PROJECT.
3. SITE SAFETY SHALL BE THE SOLE RESPONSIBILITY OF THE CONTRACTOR.
4. THE BIDDER WILL BE SOLELY RESPONSIBLE FOR DETERMINING QUANTITIES AND SHALL STATE SUCH QUANTITIES IN HIS PROPOSAL. HE SHALL BASE HIS BID ON HIS OWN ESTIMATE OF THE WORK REQUIRED AND SHALL NOT RELY ON THE ENGINEER'S ESTIMATE.
5. THE CONTRACTOR IS RESPONSIBLE FOR VERIFYING SOIL CONDITIONS PRIOR TO COMMENCEMENT OF CONSTRUCTION. A GEOTECHNICAL REPORT MAY BE AVAILABLE FROM THE OWNER. THE CONTRACTOR SHALL ABIDE BY THE RECOMMENDATIONS OF THE GEOTECHNICAL ENGINEER.
6. THE CONTRACTOR IS RESPONSIBLE FOR EXAMINING ALL SITE CONDITIONS PRIOR TO COMMENCEMENT OF CONSTRUCTION AND SHALL COMPARE FIELD CONDITIONS WITH DRAWINGS.
7. THE CONTRACTOR SHALL OBTAIN AND PAY FOR ALL PERMITS REQUIRED FOR EXECUTION OF THE WORK. THE CONTRACTOR SHALL CONDUCT HIS WORK ACCORDING TO THE REQUIREMENTS OF THE PERMITS.
8. THE CONTRACTOR IS RESPONSIBLE FOR FIELD VERIFYING ALL UTILITY INFORMATION SHOWN ON THE PLANS PRIOR TO THE START OF CONSTRUCTION. THE CONTRACTOR SHALL CALL DIGGER'S HOTLINE AT 1-800-242-8511 TO NOTIFY THE UTILITIES OF HIS INTENTIONS, AND TO REQUEST FIELD STAKING OF EXISTING UTILITIES.
9. CONTRACTOR IS ADVISED THAT ALL MUD AND DEBRIS MUST NOT BE DEPOSITED ONTO THE ADJACENT ROADWAYS PER THE REQUIREMENT OF THE MUNICIPALITY OR OTHER APPROPRIATE GOVERNMENT AGENCIES.
10. ANY ADJACENT PROPERTIES OR ROAD RIGHT-OF-WAYS WHICH ARE DAMAGED DURING CONSTRUCTION MUST BE RESTORED BY THE CONTRACTOR. THE COST OF THE RESTORATION IS CONSIDERED INCIDENTAL, AND SHOULD BE INCLUDED IN THE BID PRICES.

B. PAVING

1. THE PROPOSED IMPROVEMENTS SHALL BE CONSTRUCTED ACCORDING TO THE WISCONSIN D.O.T. STANDARD SPECIFICATIONS FOR HIGHWAY AND STRUCTURE CONSTRUCTION, LATEST EDITION, AND THE LOCAL ORDINANCES AND SPECIFICATIONS.
2. PAVING SHALL CONSIST OF FINE GRADING PAVEMENT AREAS, INSTALLATION OF CRUSHED STONE BASE AND CONCRETE PAVEMENT, PAVEMENT MARKING, AND CLEANUP. ALL MATERIALS SHALL BE PROVIDED BY THE CONTRACTOR.
3. AGGREGATES USED IN THE CRUSHED AGGREGATE BASE SHALL BE (3/4-INCH) DENSE GRADED BASE IN ACCORDANCE WITH SUBSECTION 305.2.2 OF THE STANDARD SPECIFICATIONS.
4. CONCRETE FOR CURBS, DRIVEWAY, WALKS AND NON-FLOOR SLABS SHALL BE GRADE A (OR GRADE A2 IF PLACING BY SLIP-FORMED PROCESS) AIR ENTRAINED IN ACCORDANCE WITH SECTION 501 FOR THE STANDARD SPECIFICATIONS, WITH A MINIMUM 28 DAY COMPRESSIVE STRENGTH OF 3,500 PSI.
5. CONCRETE CONSTRUCTION SHALL BE IN ACCORDANCE WITH THE FOLLOWING SECTIONS OF THE STANDARD SPECIFICATIONS: SECTION 415 FOR CONCRETE PAVEMENT, SECTION 601 FOR CONCRETE CURB AND GUTTER, AND SECTION 602 FOR CONCRETE SIDEWALKS.
6. ALL FINISHED CONCRETE SHALL BE COVERED WITH A LIQUID CURING COMPOUND CONFORMING TO AASHTO M 148, TYPE 2, IN ACCORDANCE WITH SECTION 415 OF THE STANDARD SPECIFICATIONS.

C. GRADING

1. THE PROPOSED IMPROVEMENTS SHALL BE CONSTRUCTED ACCORDING TO THE WISCONSIN D.O.T. STANDARD SPECIFICATIONS FOR HIGHWAY AND STRUCTURE CONSTRUCTION, LATEST EDITION, AND THE LOCAL ORDINANCES AND SPECIFICATIONS.
2. THE CONTRACTOR SHALL MAINTAIN SITE DRAINAGE THROUGHOUT CONSTRUCTION. THIS MAY INCLUDE THE EXCAVATION OF TEMPORARY DITCHES OR PUMPING TO ALLEVIATE WATER PONDING.
3. SILT FENCE AND OTHER EROSION CONTROL FACILITIES MUST BE INSTALLED PRIOR TO CONSTRUCTION OR ANY OTHER LAND DISTURBING ACTIVITY. THE CONTRACTOR SHALL BE RESPONSIBLE FOR REMOVING ALL EROSION CONTROL FACILITIES ONCE THE THREAT OF EROSION HAS PASSED WITH THE APPROVAL OF THE GOVERNING AGENCY.
4. THE CONTRACTOR SHALL ASSUME SOLE RESPONSIBILITY FOR THE COMPUTATIONS OF ALL GRADING AND FOR ACTUAL LAND BALANCE, INCLUDING UTILITY TRENCH SPOIL. THE CONTRACTOR SHALL IMPORT OR EXPORT MATERIAL AS NECESSARY TO COMPLETE THE PROJECT.
5. GRADING SHALL CONSIST OF CLEARING AND GRUBBING EXISTING VEGETATION, STRIPPING TOPSOIL, REMOVAL OF EXISTING PAVEMENT OR FOUNDATIONS, IMPORTING OR EXPORTING MATERIAL TO ACHIEVE AND ON-SITE EARTHWORK BALANCE, GRADING THE PROPOSED BUILDING PADS AND PAVEMENT AREAS, SCARIFYING AND FINAL COMPACTION OF THE PAVEMENT SUBGRADE, AND PLACEMENT OF TOPSOIL.
6. NO FILL SHALL BE PLACED ON A WET OR SOFT SUBGRADE. THE SUBGRADE SHALL BE PROOF-ROLLED AND INSPECTED BY THE GEOTECHNICAL ENGINEER BEFORE ANY MATERIAL IS PLACED.
7. ALL FILL SHALL BE CONSIDERED STRUCTURAL FILL AND SHALL BE PLACED IN ACCORDANCE WITH THE GEOTECHNICAL REPORT.

D. PRIVATE UTILITIES

1. THE PROPOSED IMPROVEMENTS SHALL BE CONSTRUCTED ACCORDING TO WISCONSIN ADMINISTRATIVE CODE, SECTION COMM. 82-87, LATEST EDITION, THE STANDARD SPECIFICATIONS FOR SEWER AND WATER CONSTRUCTION IN WISCONSIN, LATEST EDITION, AND THE LOCAL ORDINANCES AND SPECIFICATIONS.
2. BEFORE PROCEEDING WITH ANY UTILITY CONSTRUCTION, THE CONTRACTOR SHALL EXCAVATE EACH EXISTING LATERAL OR POINT OF CONNECTION AND VERIFY THE LOCATION AND ELEVATION OF ALL UTILITIES. IF ANY EXISTING UTILITIES ARE NOT AS SHOWN ON THE DRAWINGS, THE CONTRACTOR SHALL NOTIFY THE ENGINEER IMMEDIATELY FOR POSSIBLE REDESIGN.
3. ALL CONNECTIONS TO EXISTING PIPES AND MANHOLES SHALL BE CORED CONNECTIONS.
4. MATERIALS FOR STORM SEWER SHALL BE AS FOLLOWS:

   STORM SEWER PIPE SHALL BE HIGH DENSITY POLYETHYLENE (HDPE) WITH A SMOOTH INTERIOR AND ANNULAR EXTERIOR CORRUGATIONS, SUCH AS ADS N-12 WT. HDPE PIPE SHALL CONFORM TO ASTM F2648 AND F2306. JOINTS SHALL BE WATER TIGHT CONFORMING TO ASTM D3212 WITH ELASTOMERIC SEALS (GASKETS) CONFORMING TO ASTM F477.

   TRENCH SECTION SHALL BE CLASS "B".

   CATCH BASINS AND MANHOLES SHALL BE SOLID CONCRETE BLOCK OR PRE CAST REINFORCED CONCRETE, ASTM C-478.
5. MATERIALS FOR WATER SERVICE SHALL BE AS FOLLOWS:

   WATER SERVICE SHALL BE DUCTILE IRON (DI), ASTM A-377, WITH ELASTOMERIC JOINTS (AWWA C-111), WITH A VALVE AT THE SUPPLY MAIN.

   ALL FITTINGS SHALL BE MECHANICAL JOINT, DUCTILE IRON CONFORMING TO AWWA C-111.

   GATE VALVES SHALL BE RESILIENT WEDGE TYPE, AWWA C-509, AND SHALL BE INSTALLED WITH AN ADJUSTABLE VALVE BOX AND COVER MARKED "WATER".

   TRENCH SECTION SHALL CONFORM TO SECTION 4.3.C, FILE NO. 38 OF THE STANDARD SPECIFICATIONS. SAND OR STONE CHIP BEDDING MATERIAL IS REQUIRED.
6. EXTREME CAUTION MUST BE FOLLOWED REGARDING THE COMPACTION OF ALL UTILITY TRENCHES. MECHANICALLY COMPACTED GRANULAR BACKFILL IS REQUIRED UNDER & WITHIN 5 FEET OF ALL PAVEMENT INCLUDING SIDEWALKS. FLOODING OF BACKFILL MATERIAL IS NOT ALLOWED. THE COST OF THIS GRANULAR MATERIAL AND ITS COMPACTION IS CONSIDERED INCIDENTAL AND SHALL BE INCLUDED IN THE COST OF THE PROPOSED UTILITY.
7. UPON COMPLETION OF FINAL PAVING OPERATIONS, THE UTILITY CONTRACTOR SHALL ADJUST ALL MANHOLE AND CATCH BASIN RIMS TO FINISHED GRADE.
8. THE CONTRACTOR IS RESPONSIBLE FOR PROVIDING THE OWNER WITH A SET OF MARKED-UP PRINTS SHOWING ALL CHANGES MADE DURING THE CONSTRUCTION PROCESS. ANY CHANGES TO THE DRAWINGS OR ADDITIONAL ITEMS MUST BE REPORTED TO THE OWNER.
9. TRACER WIRE SHALL BE INSTALLED ON ALL BURIED NON-METALLIC STORM SEWERS THAT DISCHARGE TO MUNICIPAL MAINS. TRACER WIRE SHALL BE IN ACCORDANCE WITH COMM 82.30(11)(h)(1). TRACER WIRE SHALL BE A MINIMUM OF 18-GAUGE, INSULATED, SINGLE-CONDUCTOR COPPER WIRE OR EQUIVALENT. TRACER WIRE COLOR SHALL BROWN FOR STORM SEWER.

E. EROSION CONTROL

1. THE CONTRACTOR IS RESPONSIBLE FOR OBTAINING COPIES OF ALL PERMITS, INCLUDING WPDES DISCHARGE PERMITS (IF APPLICABLE), AND THE CITY OF MILWAUKEE EROSION CONTROL PERMIT. CONTRACTOR IS RESPONSIBLE FOR ABIDING BY ALL PERMIT REQUIREMENTS AND RESTRICTIONS.
2. ALL INSTALLATION AND MAINTENANCE OF EROSION CONTROL PRACTICES SHALL BE IN ACCORDANCE WITH THE APPLICABLE WISCONSIN DEPARTMENT OF NATURAL RESOURCES (WDNR) TECHNICAL STANDARD, OR THE WISCONSIN CONSTRUCTION SITE BEST MANAGEMENT PRACTICE HANDBOOK IF A TECHNICAL STANDARD IS NOT AVAILABLE.
3. ALL EROSION CONTROL FACILITIES SHALL BE MAINTAINED THROUGHOUT THE DURATION OF THE PROJECT AND WARRANTY PERIOD IN CONFORMANCE WITH THE DNR WPDES GENERAL PERMIT.
4. ALL EROSION AND SEDIMENTATION CONTROL PRACTICES SHALL BE INSPECTED WEEKLY AND WITHIN 24 HOURS AFTER EVERY PRECIPITATION EVENT THAT PRODUCES 0.5 INCHES OF RAIN OR MORE DURING A 24 HOUR PERIOD. NEEDED REPAIRS WILL BE MADE IMMEDIATELY.
5. ALL DISTURBED GROUND LEFT INACTIVE FOR THIRTY DAYS OR MORE SHALL BE STABILIZED WITH TOPSOIL, SEED, AND MULCH IN ACCORDANCE WITH THE WDNR TECHNICAL STANDARDS 1059 AND 1058.
6. TEMPORARY SEED MIXTURE SHALL CONFORM TO 630.2.1.5.1.4 OF THE WSDOT STANDARD SPECIFICATIONS. USE WINTER WHEAT OR RYE FOR FALL PLANTINGS STARTED AFTER SEPTEMBER 1.
7. DISTURBED AREAS THAT CANNOT BE STABILIZED WITH A DENSE GROWTH OF VEGETATION BY SEEDING AND MULCHING DUE TO TEMPERATURE OR TIMING OF CONSTRUCTION, SHALL BE STABILIZED BY APPLYING ANIONIC POLYACRYLAMIDE (PAM) IN ACCORDANCE WITH WDNR TECHNICAL STANDARD 1050.
8. ALL WATER FROM CONSTRUCTION DEWATERING SHALL BE TREATED IN ACCORDANCE WITH WDNR TECHNICAL STANDARD 1061 PRIOR TO DISCHARGE TO WATERS OF THE STATE, WETLANDS, OR OFFSITE.
9. THE CONTRACTOR IS RESPONSIBLE FOR INSTALLATION OF ANY ADDITIONAL EROSION CONTROL MEASURES NECESSARY TO PREVENT EROSION AND SEDIMENTATION. ALL DISTURBED AREAS ARE TO DRAIN TO APPROVED SEDIMENT CONTROL MEASURES AT ALL TIMES DURING SITE DEVELOPMENT UNTIL FINAL STABILIZATION IS ACHIEVED. DEPENDING ON HOW THE CONTRACTOR GRADES THE SITE, IT MAY BE NECESSARY TO INSTALL TEMPORARY SEDIMENT TRAPS IN VARIOUS LOCATIONS THROUGHOUT THE PROJECT. TEMPORARY SEDIMENT TRAPS SHALL BE DESIGNED, INSTALLED, AND MAINTAINED IN ACCORDANCE WITH WDNR TECHNICAL STANDARD 1063.
10. ANY SEDIMENT TRACKED ONTO A PUBLIC OR PRIVATE ROAD SHOULD BE REMOVED BY STREET CLEANING, NOT FLUSHING, BEFORE THE END OF EACH WORKING DAY.
11. DUST CONTROL SHALL BE PROVIDED AS NECESSARY IN ACCORDANCE WITH WDNR TECHNICAL STANDARD 1068.
12. FINAL STABILIZATION OF LANDSCAPED AREAS SHALL BE IN ACCORDANCE WITH THE APPROVED LANDSCAPE PLAN.
14. ALL SEEDED AREAS WILL BE FERTILIZED, RESEEDED AS NECESSARY, AND MULCHED ACCORDING TO SPECIFICATIONS IN THE APPROVED LANDSCAPE PLAN TO MAINTAIN A VIGOROUS DENSE VEGETATIVE COVER.

THE LOCATIONS OF EXISTING UTILITY INSTALLATIONS AS SHOWN ON THIS PLAN ARE APPROXIMATE. THERE MAY BE OTHER UNDERGROUND UTILITY INSTALLATIONS WITHIN THE PROJECT AREA THAT ARE NOT SHOWN.

DIGGERS HOTLINE

Call 811 3 Work Days Before You Dig
or Toll Free (800) 242-8511
Hearing Impaired TDD (800) 542-2289
www.DiggersHotline.com

GORMAN & COMPANY, INC.
REAL ESTATE DEVELOPMENT & MANAGEMENT
200 N. MAIN STREET
OREGON, WI 53575

R.A. Smith National
Beyond Surveying and Engineering
16745 W. Bluemound Road, Brookfield, WI 53005-5938
262-781-1000 Fax 262-781-8466, www.rasmithnational.com
Appleton, WI Orange County, CA Pittsburgh, PA
CONTACT: RYAN LANCOUR, P.E.

THE PROFESSIONAL CENTER

THE BREWERY DERVELOPMENT
WEST JUNEAU AVE.
MILWAUKEE, WISCONSIN

Project No. 3100168.02
Plot Date: 07-20-12
Drawn by: RJL

Issue dates: 07-20-12

PRELIMINARY NOT FOR CONSTRUCTION

Sheet Title

SITE, PAVING, UTILITY GRADING & EROSION CONTROL PLAN

Sheet No.

C101

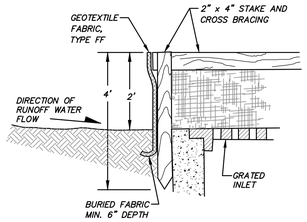

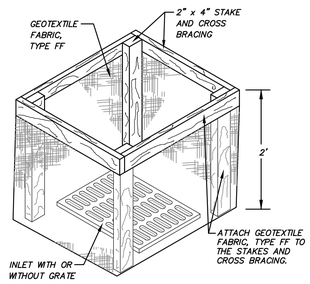

INLET PROTECTION, TYPE A

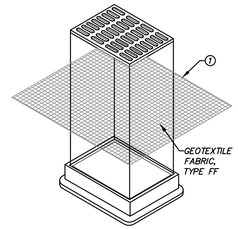

INLET PROTECTION, TYPE B
(WITHOUT CURB BOX)
(CAN BE INSTALLED IN ANY INLET WITHOUT A CURB BOX)

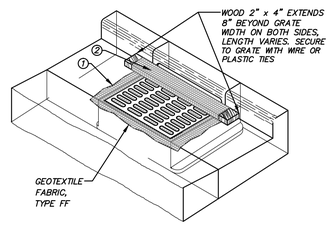

INLET PROTECTION, TYPE C
(WITH CURB BOX)

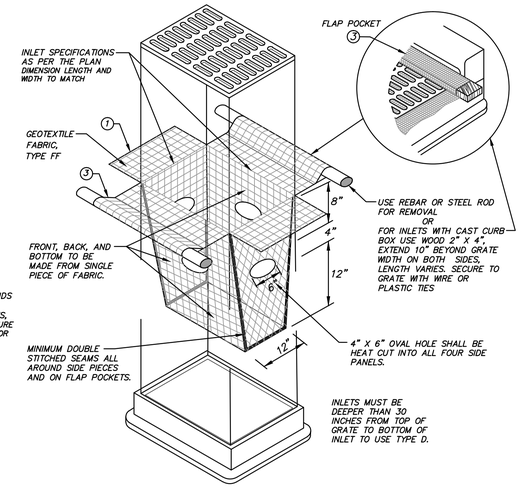

INLET PROTECTION, TYPE D
(CAN BE INSTALLED IN ANY INLET TYPE WITH OR WITHOUT A CURB BOX AS PER NOTE 2)

GENERAL NOTES

INLET PROTECTION DEVICES SHALL BE MAINTAINED OR REPLACED AT THE DIRECTION OF THE ENGINEER.

MANUFACTURED ALTERNATIVES APPROVED AND LISTED ON THE WISDOT'S EROSION CONTROL PRODUCT ACCEPTABILITY LIST MAY BE SUBSTITUTED.

WHEN REMOVING OR MAINTAINING INLET PROTECTION, CARE SHALL BE TAKEN SO THAT THE SEDIMENT TRAPPED ON THE GEOTEXTILE FABRIC DOES NOT FALL INTO THE INLET. ANY MATERIAL FALLING INTO THE INLET SHALL BE REMOVED IMMEDIATELY.

TYPE A IS TO BE USED PRIOR TO PAVING AND TYPED B, C, AND D ARE TO USED AFTER PAVING IS PLACED.

TYPE A SHALL BE USED AROUND INLETS AND UNPAVED AREAS UNTIL PERMANENT STABILIZATION METHODS HAVE BEEN ESTABLISHED.

TYPE B SHALL BE USED AFTER THE CASTING AND GRATE ARE IN PLACE.

TYPE C SHALL BE USED ON STREET INLETS WITH CURB HEADS.

TYPE D SHALL BE USED IN AREAS WHERE OTHER TYPES OF INLET PROTECTION ARE INCOMPATIBLE WITH ROADWAY AND TRAFFIC CONDITIONS (I.E. POSSIBLE SAFETY HAZARD IF PONDING OCCURS.)

1 FINISHED SIZE, INCLUDING FLAP POCKETS WHERE REQUIRED, SHALL EXTEND A MINIMUM OF 10" AROUND THE PERIMETER TO FACILITATE MAINTENANCE OR REMOVAL.

2 FOR INLET PROTECTION, TYPE C (WITH CURB BOX), AN ADDITIONAL 18" OF FABRIC IS WRAPPED AROUND THE WOOD AND SECURED WITH STAPLES. THE WOOD SHALL NOT BLOCK THE ENTIRE HEIGHT OF THE CURB BOX OPENING.

3 FLAP POCKETS SHALL BE LARGE ENOUGH TO ACCEPT WOOD 2X4.

CONSTRUCTION SHALL BE IN ACCORDANCE WITH WDNR CPS TECHNICAL STANDARD 1060.

INSTALLATION NOTES

TYPE B & C:
TRIM EXCESS FABRIC IN THE FLOW LINE TO WITHIN 3" OF THE GRATE.

THE CONTRACTOR SHALL DEMONSTRATE A METHOD OF MAINTENANCE, USING A SEWN FLAP, HAND HOLDS OR OTHER METHOD TO PREVENT ACCUMULATED SEDIMENT FROM ENTERING THE INLET.

TYPE D:
DO NOT INSTALL INLET PROTECTION TYPE D IN INLETS SHALLOWER THAN 30", MEASURED FROM THE BOTTOM OF THE INLET TO THE TOP OF THE GRATE.

TRIM EXCESS FABRIC IN THE FLOW LINE TO WITHIN 3" OF THE GRATE.

THE INSTALLED BAG SHALL HAVE A MINIMUM SIDE CLEARANCE, BETWEEN THE INLET WALLS AND THE BAG, MEASURED AT THE BOTTOM OF THE OVERFLOW HOLES, OF 3". WHERE NECESSARY THE CONTRACTOR SHALL CINCH THE BAG, USING PLASTIC ZIP TIES, TO ACHIEVE THE 3" CLEARANCE. THE TIES SHALL BE PLACED AT A MAXIMUM OF 4" FROM THE BOTTOM OF THE BAG.

MAINTENANCE

A. REMOVE INLET PROTECTION DEVICES ONCE THE CONTRIBUTING DRAINAGE AREA IS STABILIZED WITH APPROPRIATE VEGETATION OR IMPERVIOUS AREA.

B. INLET PROTECTION SHALL BE, AT A MINIMUM, INSPECTED WEEKLY AND WITHIN 24 HOURS AFTER EVERY PRECIPITATION EVENT THAT PRODUCES 0.5 INCHES OF RAIN OR MORE DURING A 24-HOUR PERIOD.

C. SEDIMENT DEPOSITS SHALL BE REMOVED AND THE INLET PROTECTION DEVICE RESTORED TO ITS ORIGINAL DIMENSIONS WHEN THE SEDIMENT HAS ACCUMULATED BETWEEN 1/3 TO 1/2 THE DESIGN DEPTH OF THE DEVICE, OR WHEN THE DEVICE IS NO LONGER FUNCTIONING AS DESIGNED. REMOVED SEDIMENT SHALL BE DEPOSITED IN A SUITABLE AREA AND STABILIZED.

D. DUE CARE SHALL BE TAKEN TO ENSURE SEDIMENT DOES NOT FALL INTO THE INLET AND IMPEDE THE INTENDED FUNCTION OF THE DEVICE. ANY MATERIAL FALLING INTO THE INLET SHALL BE REMOVED.

STORM DRAIN INLET PROTECTION DETAILS

NOT TO SCALE

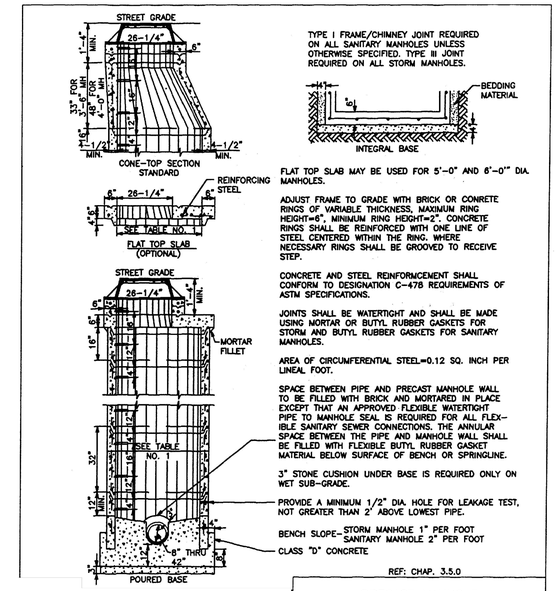

NOTES:
CONTRACTOR RESPONSIBLE FOR VERIFYING REQUIRED CASTING IS COMPATIBLE WITH STRUCTURE. IF NOT COMPATIBLE, CONTACT ENGINEER IMMEDIATELY FOR POSSIBLE REDESIGN.

MANHOLES/INLETS

FOR ALL MANHOLES REFER TO FILE No. 12 (STANDARD SPECIFICATIONS FOR SEWER AND WATER CONSTRUCTION IN WISCONSIN, DETAIL ABOVE) EXCEPT:

A. USE NEENAH CASTING R-2560-E ON STORM INLET R-10 & R-11.
B. REFER TO UTILITY PLAN FOR PROPOSED MANHOLE DIAMETERS.

PRECAST MANHOLE/INLET DETAIL

NOT TO SCALE

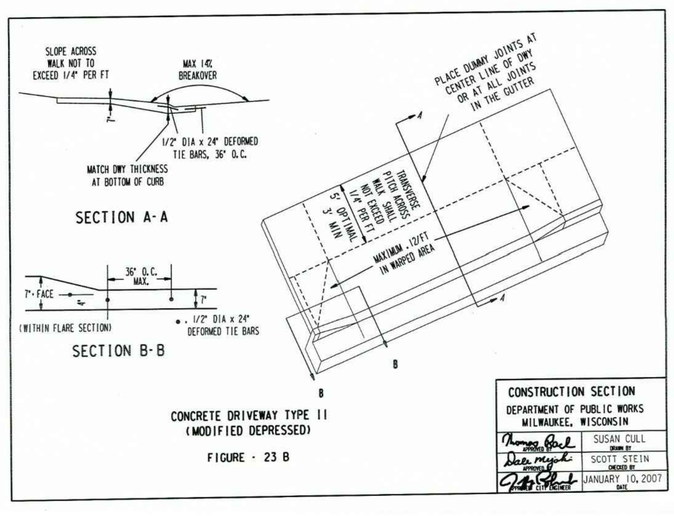

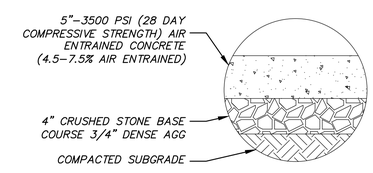

NOTES:
1. CONSTRUCTION MATERIALS AND PROCEDURES SHOULD BE IN ACCORDANCE WITH SECTION 305 AND 415 OF THE WISDOT STANDARD SPECIFICATIONS.

CONCRETE SIDEWALK PAVEMENT SECTION

GORMAN & COMPANY, INC.
REAL ESTATE DEVELOPMENT & MANAGEMENT
200 N. MAIN STREET
OREGON, WI 53575

R.A. Smith National
Beyond Surveying and Engineering
16745 W. Bluemound Road, Brookfield, WI 53005-5938
262-781-1000 Fax 262-781-8466, www.rasmithnational.com
Appleton, WI Orange County, CA Pittsburgh, PA
CONTACT: RYAN LANCOUR, P.E.

THE PROFESSIONAL CENTER
THE BREWERY DERVELOPMENT
WEST JUNEAU AVE.
MILWAUKEE, WISCONSIN

Project No. 3100168.02
Plot Date: 07-20-12
Drawn by: RJL

Issue dates: 07-20-12

PRELIMINARY NOT FOR CONSTRUCTION

Sheet Title

DETAILS

Sheet No.
C501

1 SOUTH

SCALE: 3/16" = 1'-0"

GORMAN & COMPANY, INC.

REAL ESTATE DEVELOPMENT & MANAGEMENT
200 N. MAIN STREET
OREGON, WI 53575

THE PROFESSIONAL CENTER

1036 W JUNEAU AVE
MILWAUKEE, WI

Date	Revision

Issue Date:	2012.07.20
Project No.	-
Drawn by:	BSF
Checked by:	
Approved:	

Sheet Title

EXTERIOR ELEVATIONS

Sheet No.

A201

7/20/2012 11:04:40 AM

1 WEST
SCALE: 3/16" = 1'-0"

GORMAN & COMPANY, INC.
REAL ESTATE
DEVELOPMENT &
MANAGEMENT
200 N. MAIN STREET
OREGON, WI 53575

THE PROFESSIONAL CENTER

1036 W JUNEAU AVE
MILWAUKEE, WI

Date	Revision

Issue Date:	2012.07.20
Project No.	-
Drawn by:	BSF
Checked by:	
Approved:	

Sheet Title
EXTERIOR ELEVATIONS

Sheet No.
A202

7/20/2012 11:04:45 AM

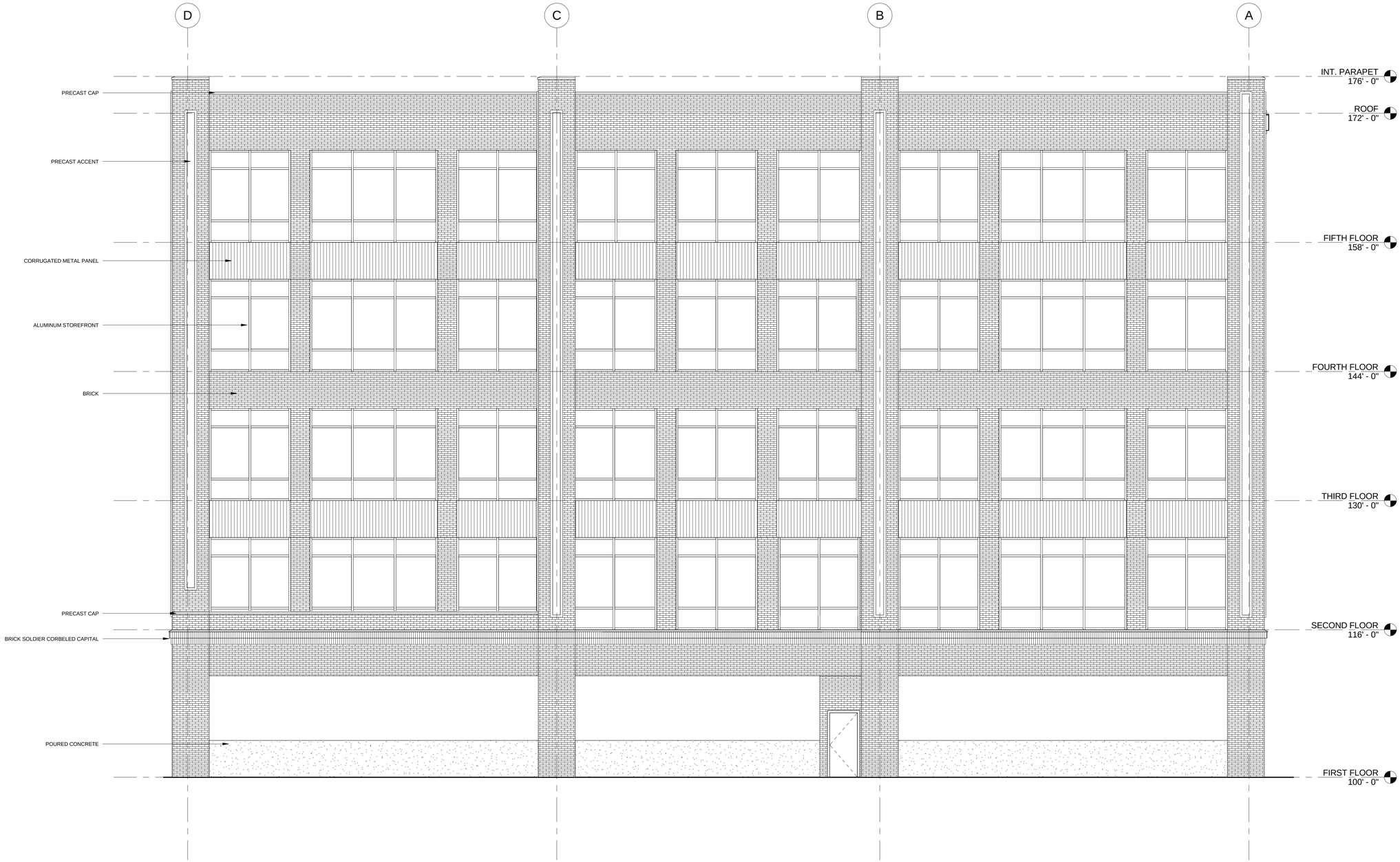

1 NORTH

SCALE: 3/16" = 1'-0"

GORMAN & COMPANY, INC.

REAL ESTATE
DEVELOPMENT &
MANAGEMENT
200 N. MAIN STREET
OREGON, WI 53575

THE PROFESSIONAL CENTER

1036 W JUNEAU AVE
MILWAUKEE, WI

Date	Revision

Issue Date:	2012.07.20
Project No.	-
Drawn by:	BSF
Checked by:	
Approved:	

Sheet Title

EXTERIOR ELEVATIONS

Sheet No.

A203

8/3/2012 2:26:46 PM

1 EAST

SCALE: 3/16" = 1'-0"

GORMAN & COMPANY, INC.

REAL ESTATE
DEVELOPMENT &
MANAGEMENT
200 N. MAIN STREET
OREGON, WI 53575

THE PROFESSIONAL CENTER

1036 W JUNEAU AVE
MILWAUKEE, WI

Date	Revision

Issue Date:	2012.07.20
Project No.	-
Drawn by:	BSF
Checked by:	
Approved:	

Sheet Title

EXTERIOR ELEVATIONS

Sheet No.

A204

7/20/2012 11:04:56 AM

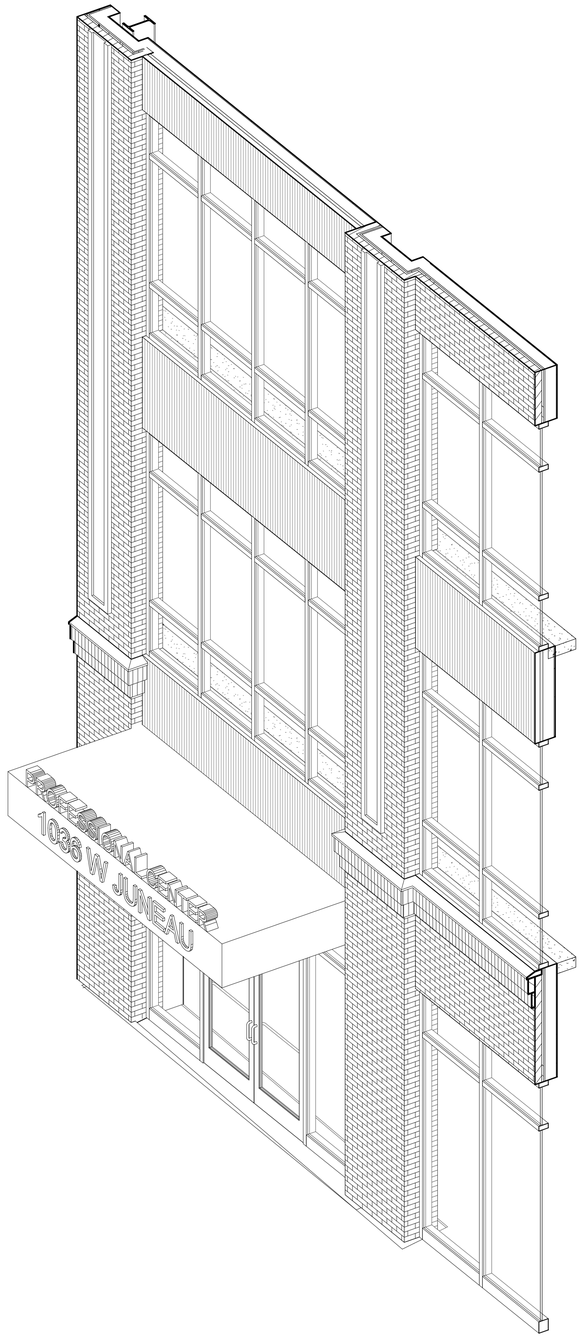

1 SECTION STUDY: TYPICAL STOREFRONT

SCALE:

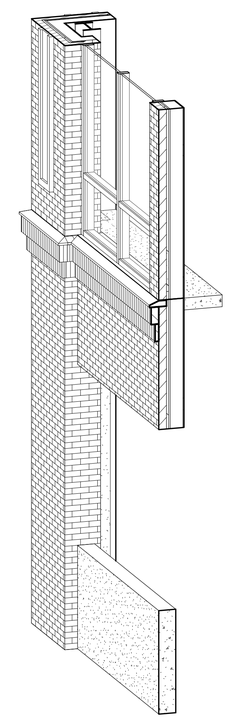

2 SECTION STUDY: TYPICAL @ GARAGE

SCALE:

GORMAN & COMPANY, INC.
REAL ESTATE
DEVELOPMENT &
MANAGEMENT
200 N. MAIN STREET
OREGON, WI 53575

THE PROFESSIONAL CENTER

1036 W JUNEAU AVE
MILWAUKEE, WI

Date	Revision

Issue Date:	2012.07.20
Project No.	-
Drawn by:	Author
Checked by:	
Approved:	

Sheet Title

SECTION STUDY

Sheet No.

A205

8/3/2012 2:58:21 PM